https://howarm.co.uk/

WARNING

- Naked flames is strictly prohibited! Do not use wood as fuel!When using the barbecue grill, the lid of the grill must be opened.The lid can only be closed when barbecue grill has completelycooled down after using, otherwise it will easily cause the lid deform and paint off, which will affect the appearance and use.

HOWARM

BBQ GRILL

/MODEL: DS-34

USER MANUAL

ATTENTION!

READ THE INSTRUCTIONS GIVEN IN THIS HANDBOOK VERY CAREFULLY. IT SHOULD BE PUT ASIDE FOR FURTHER CONSULTATION DURING THE ENTIRE LIFE-CYCLE OF THE PRODUCT SINCE IT GIVES IMPORTANT INDICATIONS ON THE PRODUCT'S FUNCTIONS AND SAFETY DURING INSTALLATION, USE AND MAINTENANCE.

USE THE BARBECUE OUTDOOR IN VENTILATED ENVIRONMENTS; A WRONG ASSEMBLY OF THE BARBECUE CAN BE EXTREMELY DANGEROUS. PLEASE FOLLOW WITH ATTENTION THE ASSEMBLY INSTRUCTIONS • DO NOT USE THE BARBECUE IF ALL ITS PARTS ARE NOT PRESENT AND CORRECTLY POSITIONED • FAILURE TO OBSERVE THE WARNINGS HERE BELOW MAY CAUSE FIRE, EXPLOSION, BURNS AND IN GENERAL SERIOUS INJURY OR DAMAGE TO PERSONS OR THINGS. IN ANY CASE, BEFORE USING THE BARBECUE, BE CAREFUL WITH THE ATTENTION OF THE FUNCTIONING AND TESTING PROCEDURES DESCRIBED IN THIS MANUAL. ATTENTION TO THIS PRECAUTION EVEN IF THE BARBECUE HAS BEEN ASSEMBLED BY THE DEALER • USE OF ALCOHOL, MEDICINES OR DRUGS CAN PREVENT THE USER'S CAPABILITIES TO ASSEMBLE, MOVE, STORE OR PROMOTE THE BARBECUE CORRECTLY AND SAFELY • THIS BARBECUE SHOULD NOT BE USED BY CHILDREN. SOME ACCESSIBLE BARBECUE PARTS COULD REACH HIGH TEMPERATURES - DO NOT MOVE DURING USE! • DURING USE, KEEP THE LITTLE CHILDREN, THE ELDERLY AND THE PETS AT SECURE DISTANCE. MAKE SURE THAT THE BARBECUE IS PLACED ON A FLAT AND STABLE SURFACE DURING USE; BEFORE FOOD COOKING, LEAVE TO FORM THE CINDERS WITH THE COMBUSTION OF THE CHARCOAL FOR AT LEAST 30 MINUTES; IN ANY CASE, WAIT FOR THE FORMATION OF A LAYER OF ASH ON THE FUEL BEFORE PROCEEDING COOKING.

DO NOT USE WOOD AS FUEL!

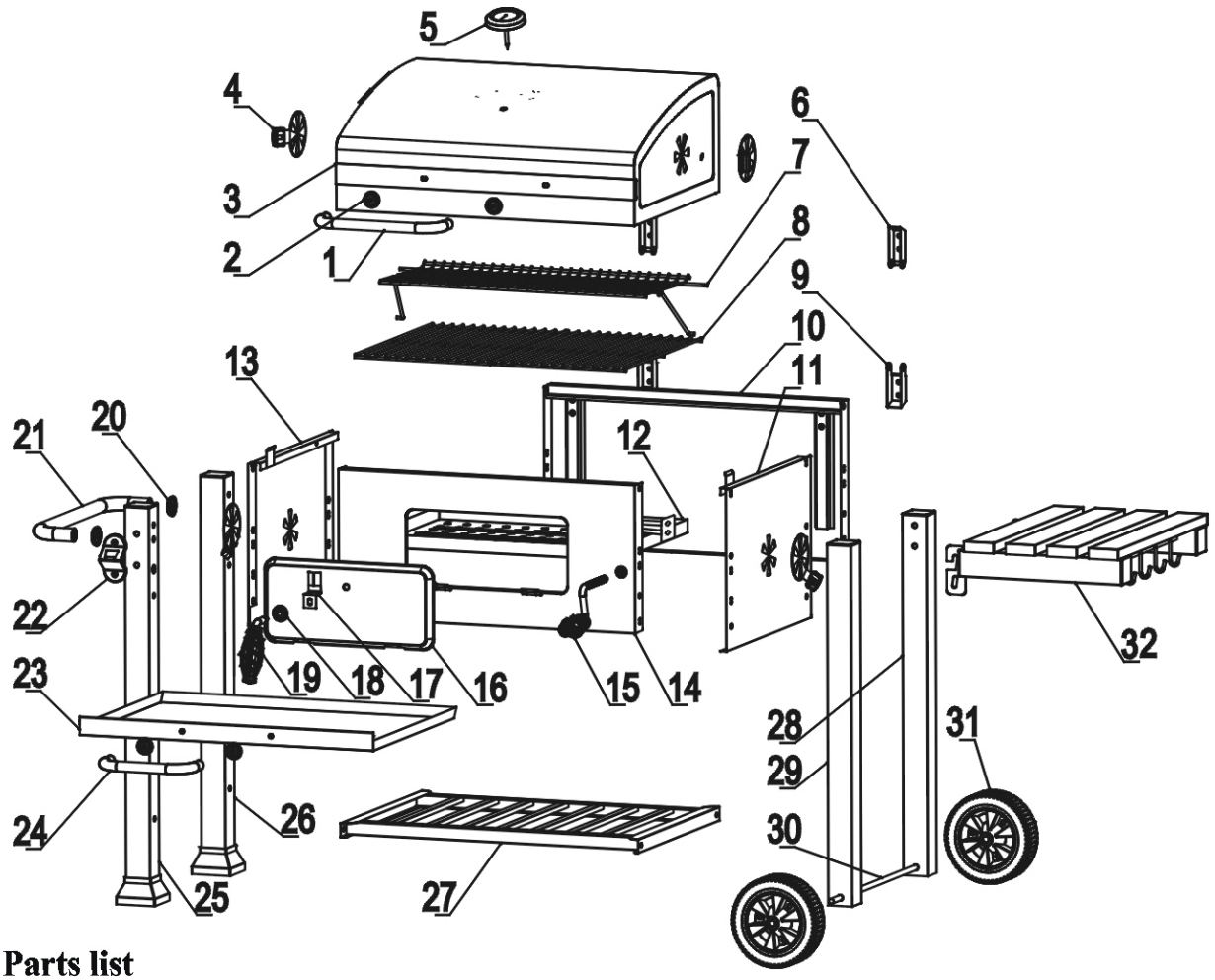

Parts list

S/N	Description	Quantity
1	Furnace cover handle	1
3	Furnace cover	1
5	Thermometer	1
7	Warming rack	1
9	Bottom hinge	2
11	Right side plate for firebowl	1
13	Left side plate for firebowl	1
15	Lifting handle	1
17	Blocking plate for charcoal	1
19	Carbon door handle	1
21	Side handle	1
23	Ash tray	1
25	Front long leg	1
27	Bottom plate	1
29	Front wheel leg	1
31	Wheels	2
33	Take down	1

S/N	Description	**Quantity**
2	Base for front handle	4
4	Airvent	4
6	Upper hinge	2
8	Cooking grill	2
10	Rear plate for firebowl	1
12	Carbon tray	1
14	Front plate for firebowl	1
16	Carbon door	1
18	Base for charcoal door handle	1
20	Base for side handle	2
22	Bottle open	1
24	Ash tray handle	1
26	Back long leg	1
28	Back wheel leg	1
30	Axle	1
32	side plate	1

A		M6 x 14	36
C		M6 x 14	4
E		M5	8
G		M6 x 70	2
I		M4 x 10	4
K	White	M5 x 10	4
M			1

B	Black	M5 x 10	4
D		M6 x 40	10
F		M6	20
H		D1.4	3
J		M4	4
L			1
N			1

Installation Instructions

Allow plenty of time for this installation:

Prepare a solid work surface of 2~3 m^2 prior installation.Place tools and parts on hand.

WARNING!

While every effort has been made in removing any sharp edges of the barbecue,care must be taken in handling the barbecue to prevent accidental injuries.

Step 1

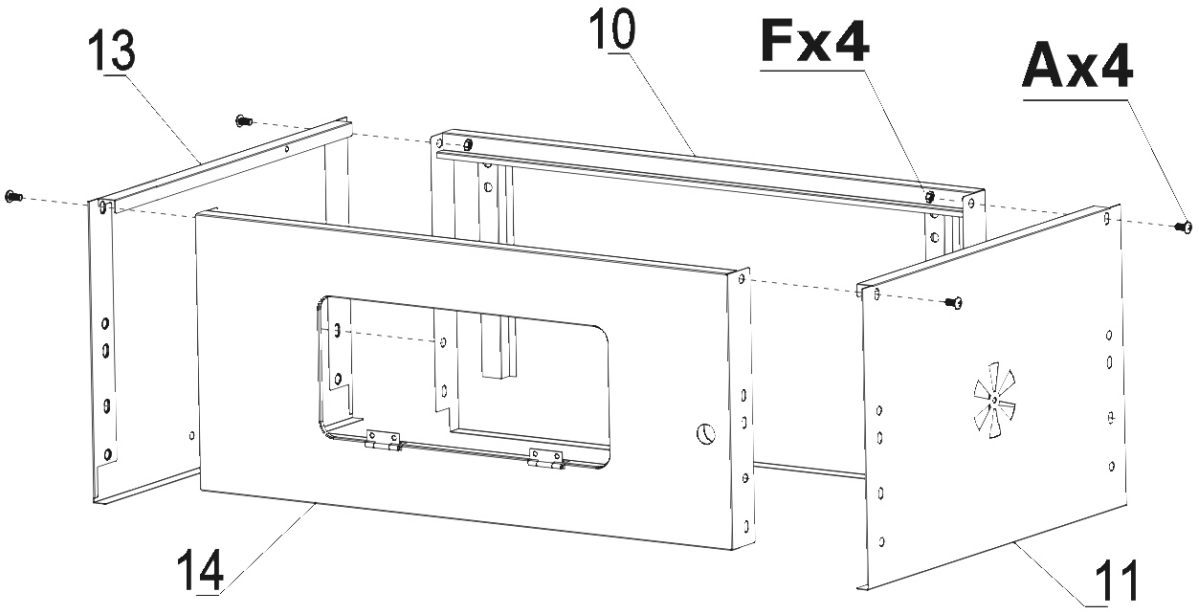

Step 2

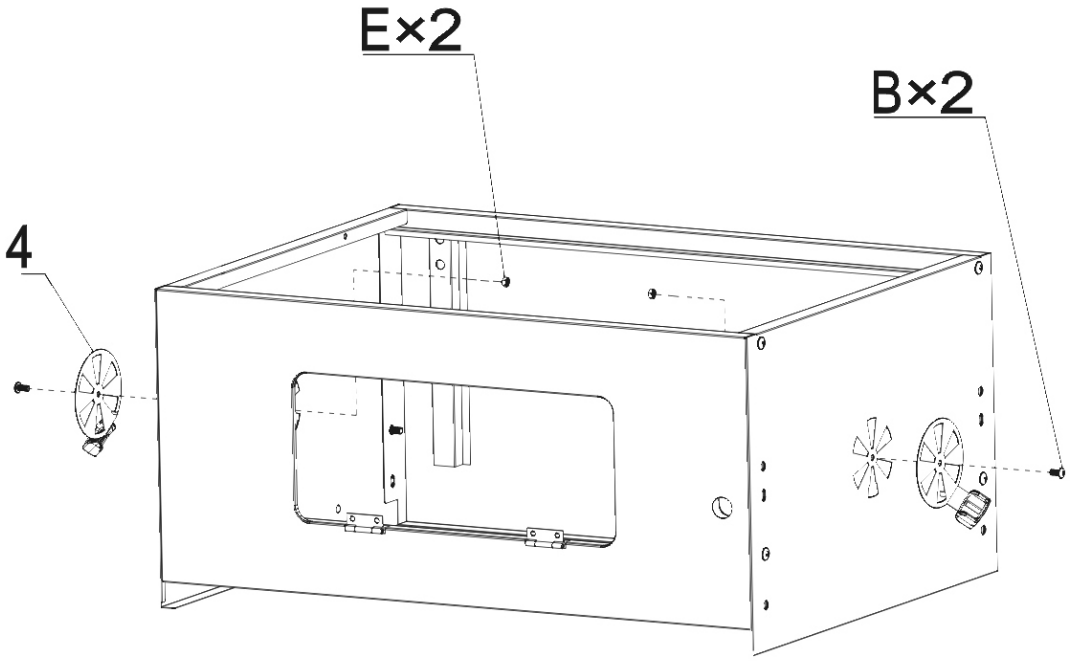

Step 3

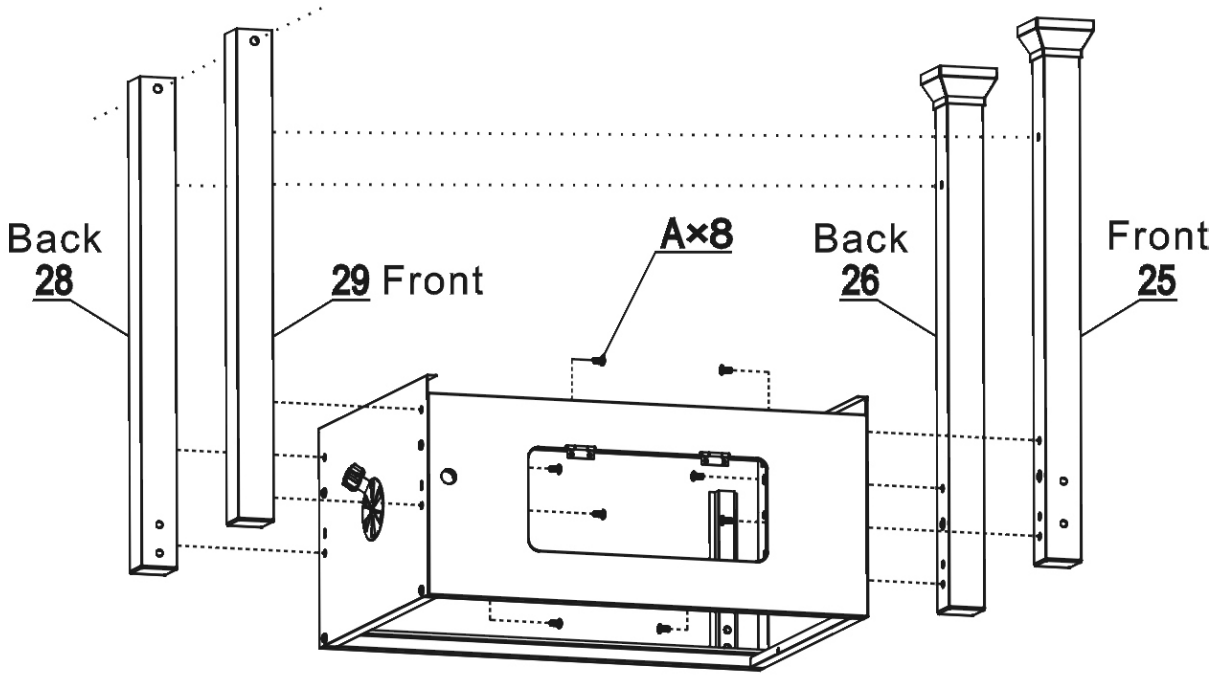

Step 4

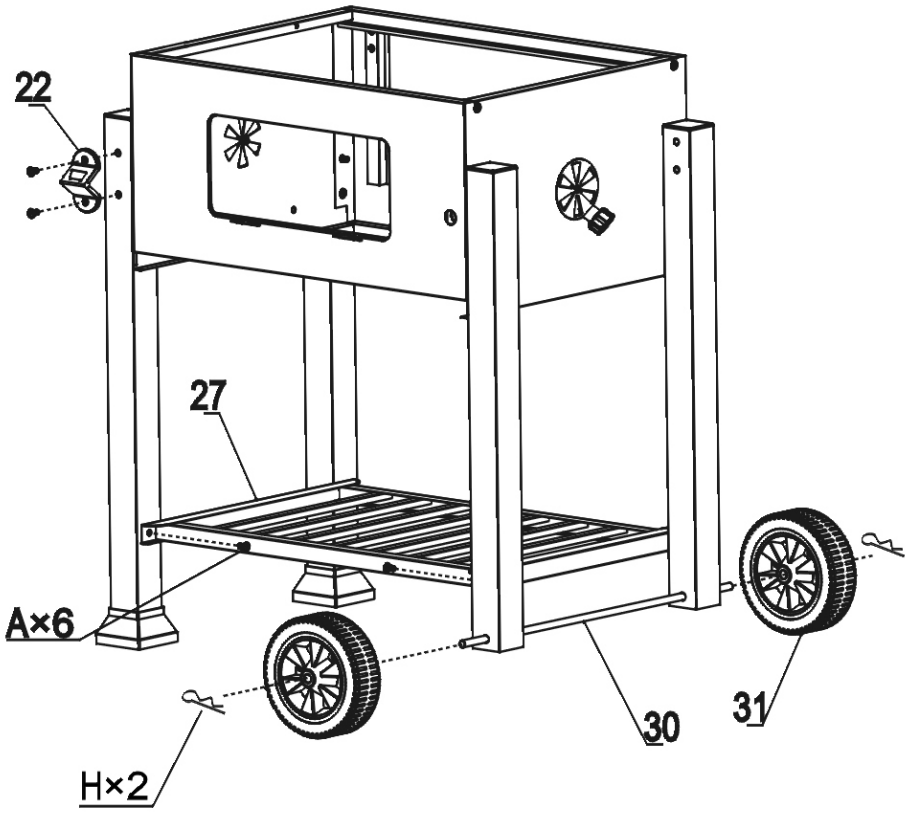

Step 5

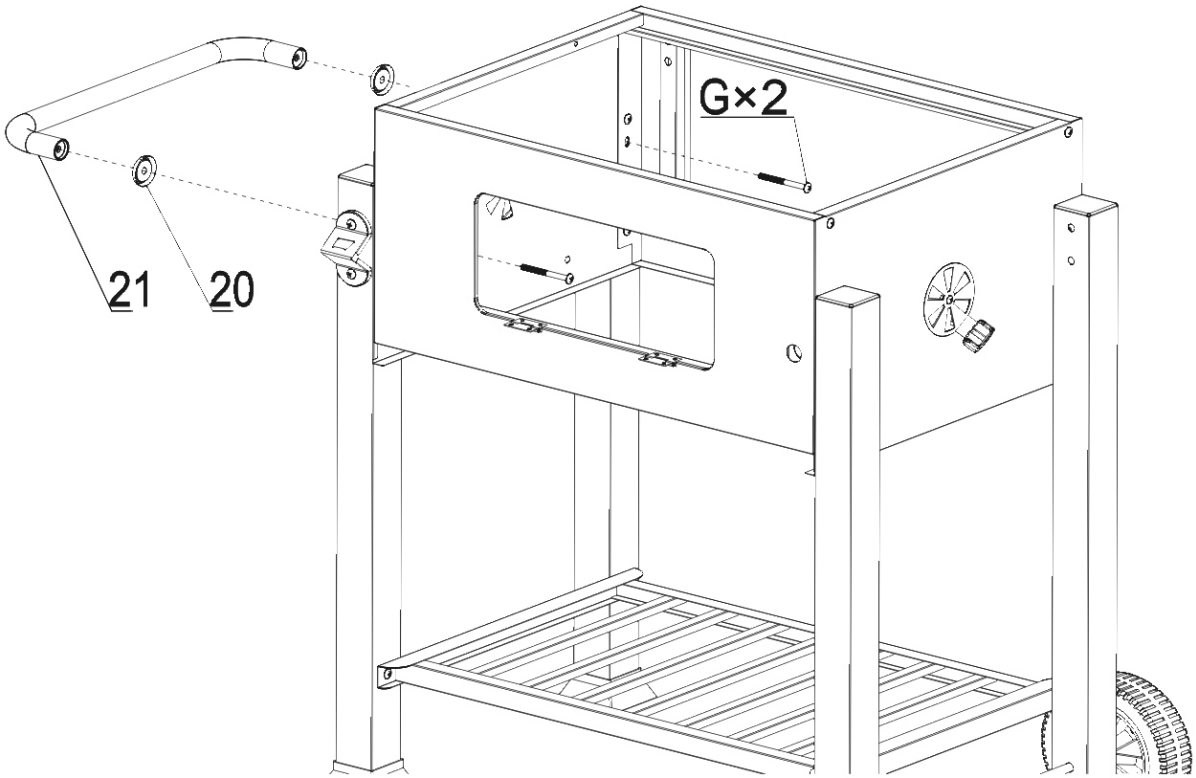

Step 6

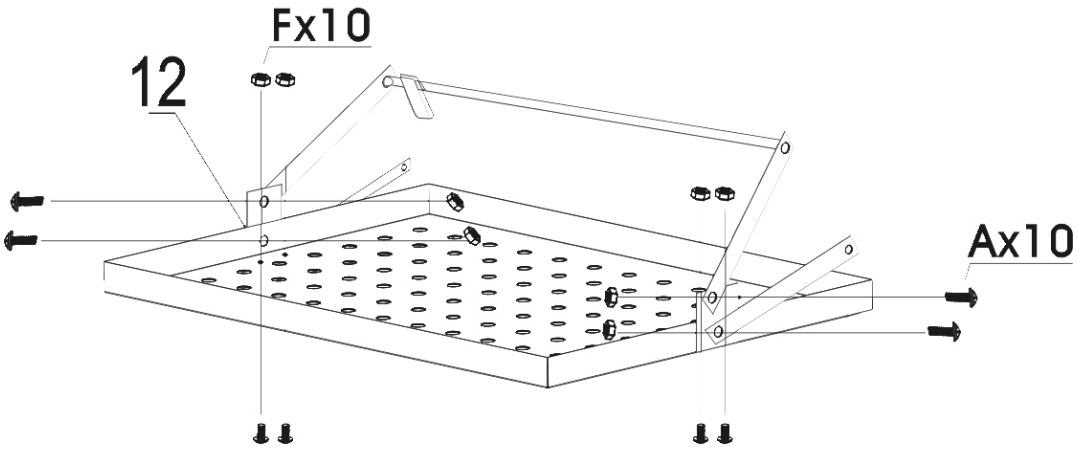

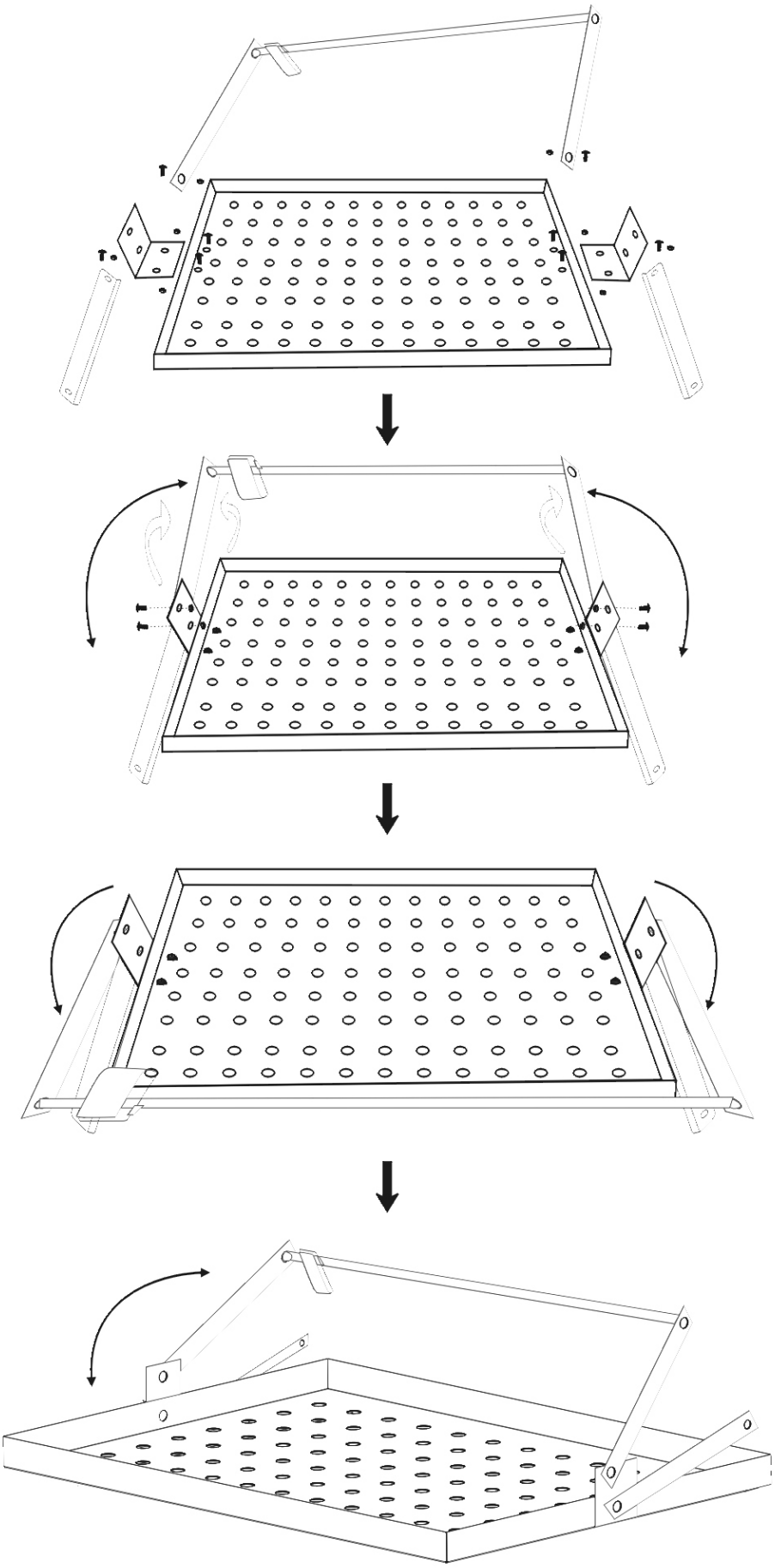

Step 7

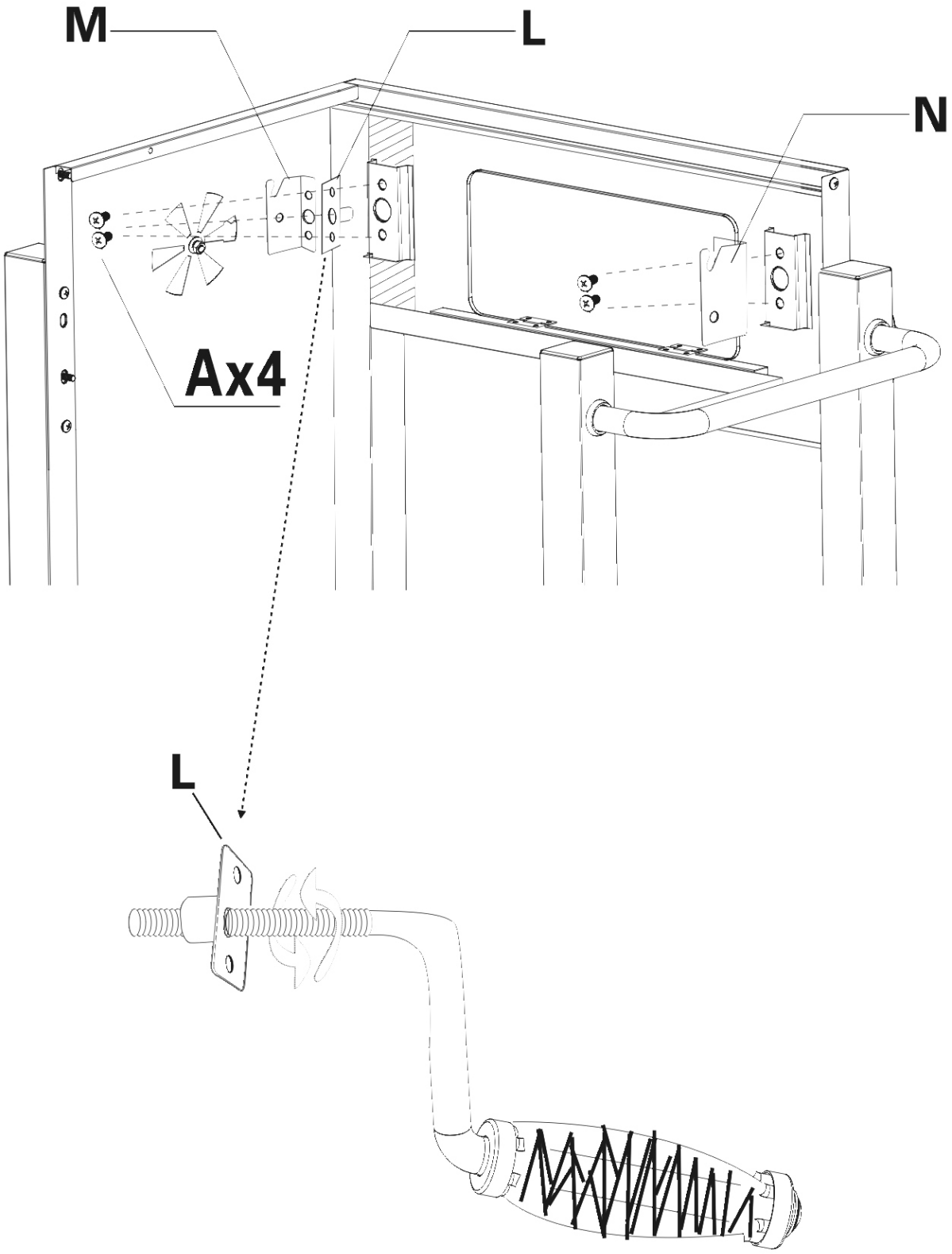

Step 8

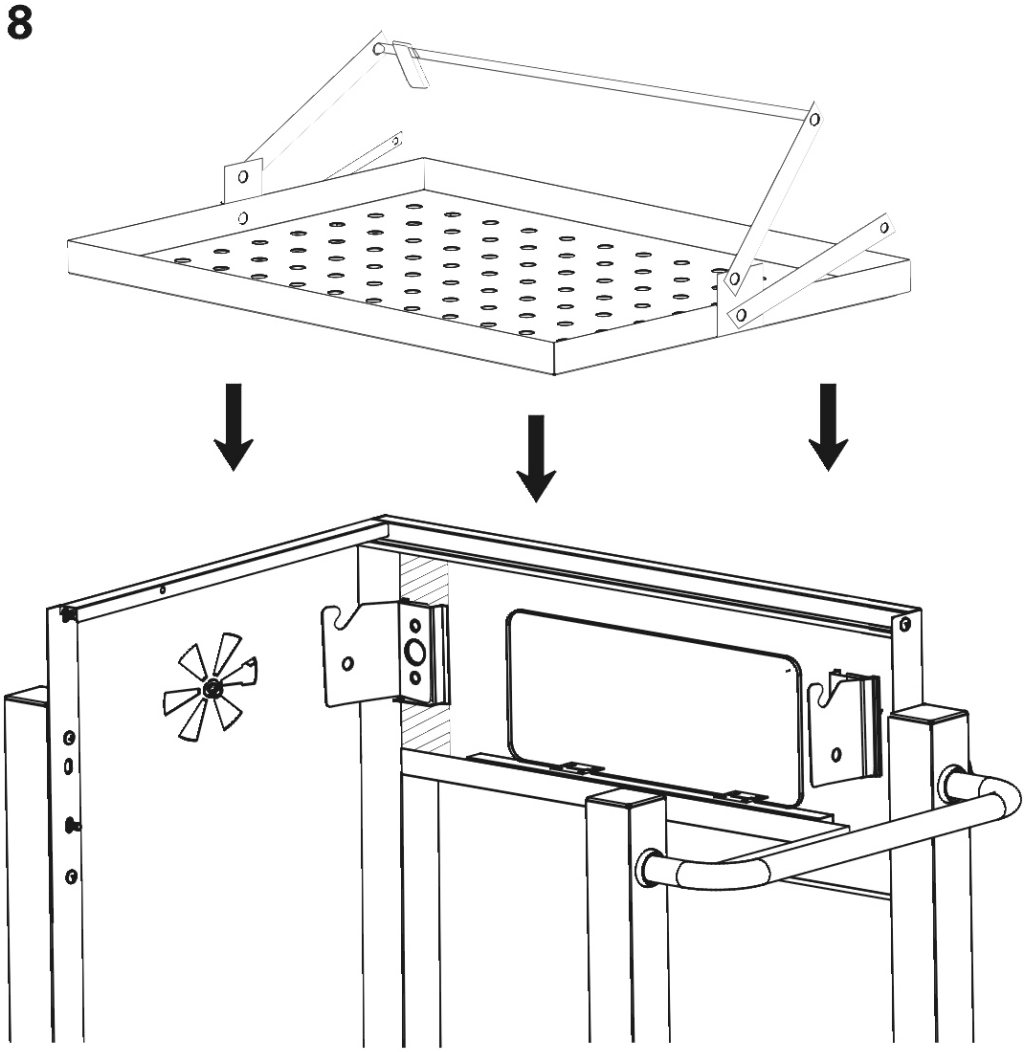

Step 9

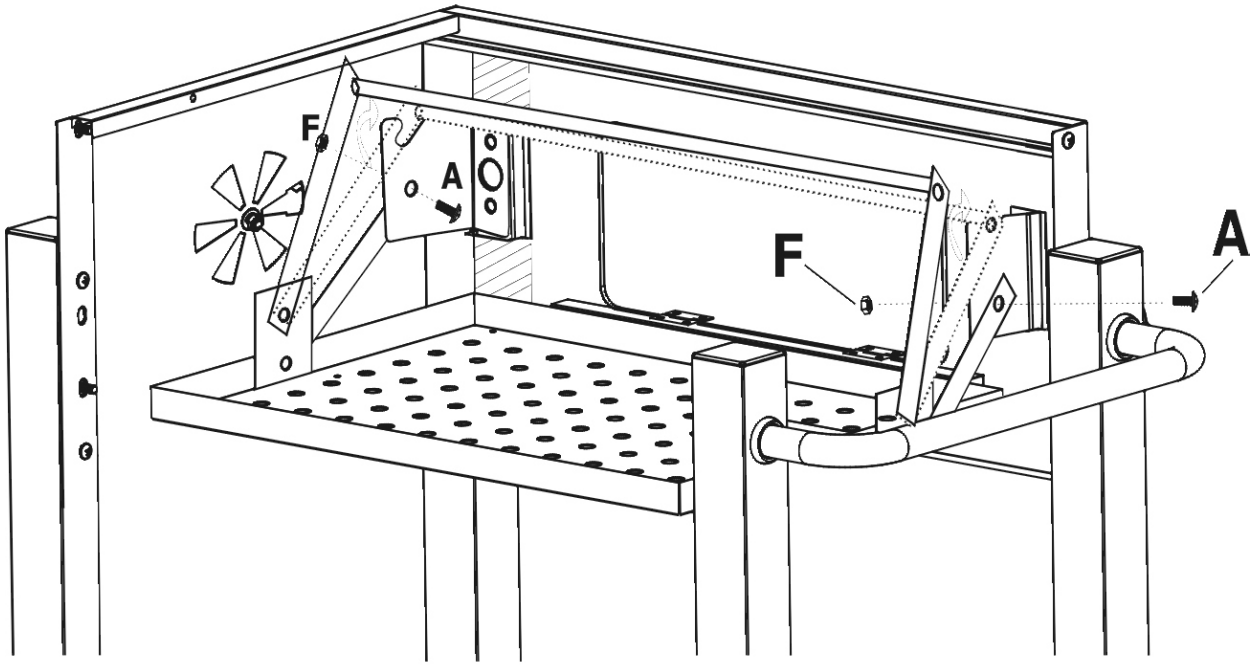

Step 10

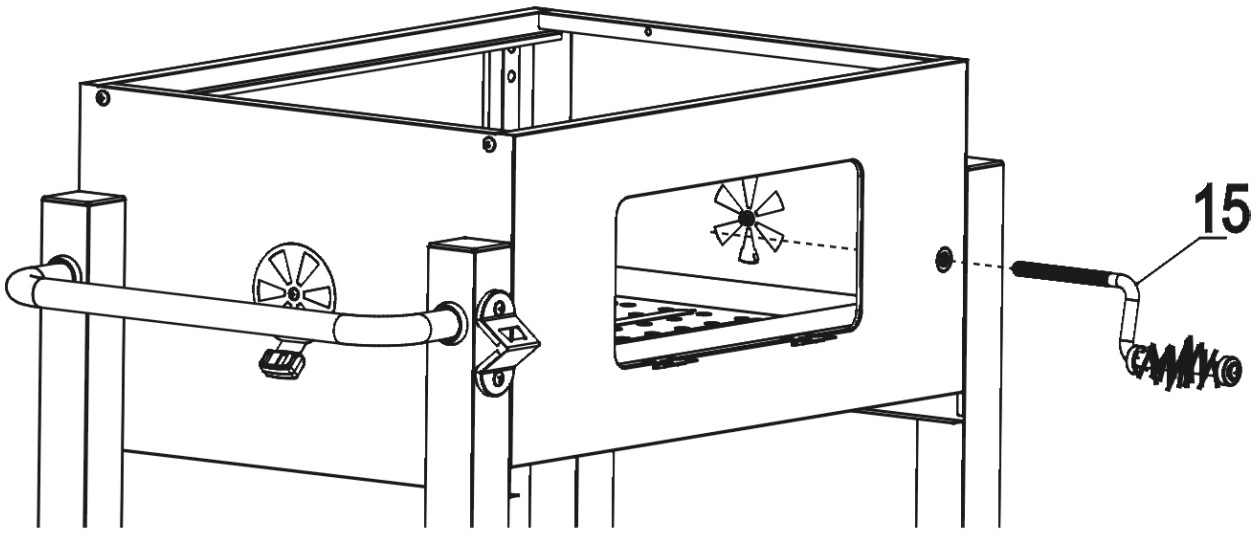

Step 11

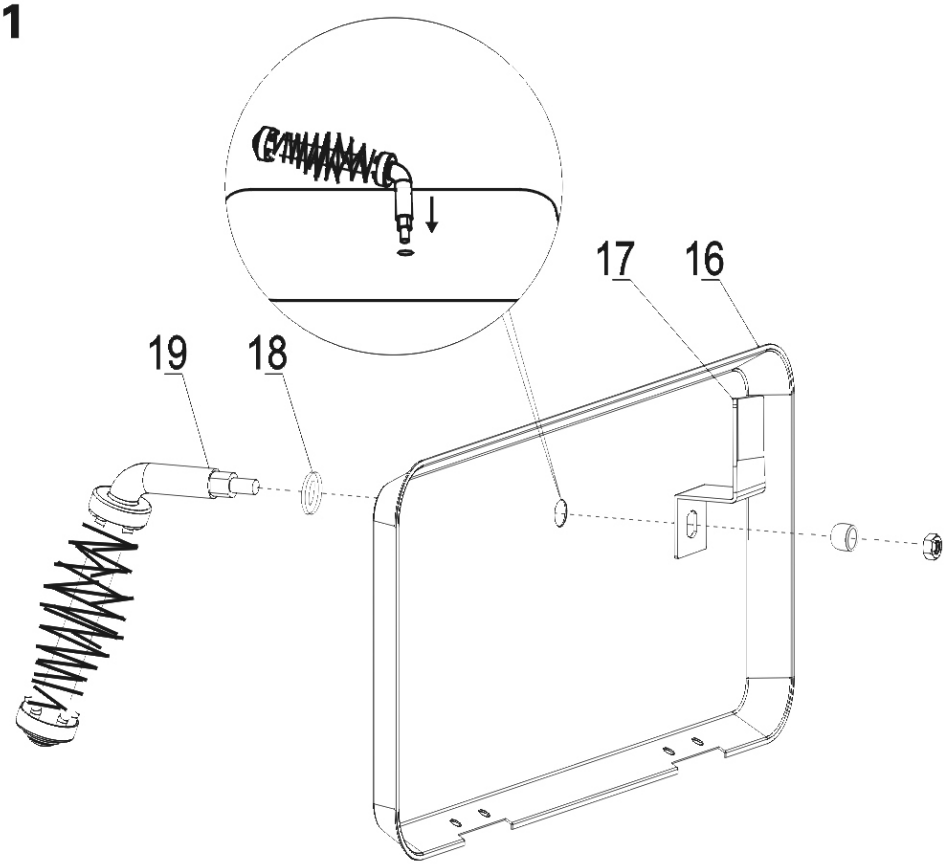

Step 12

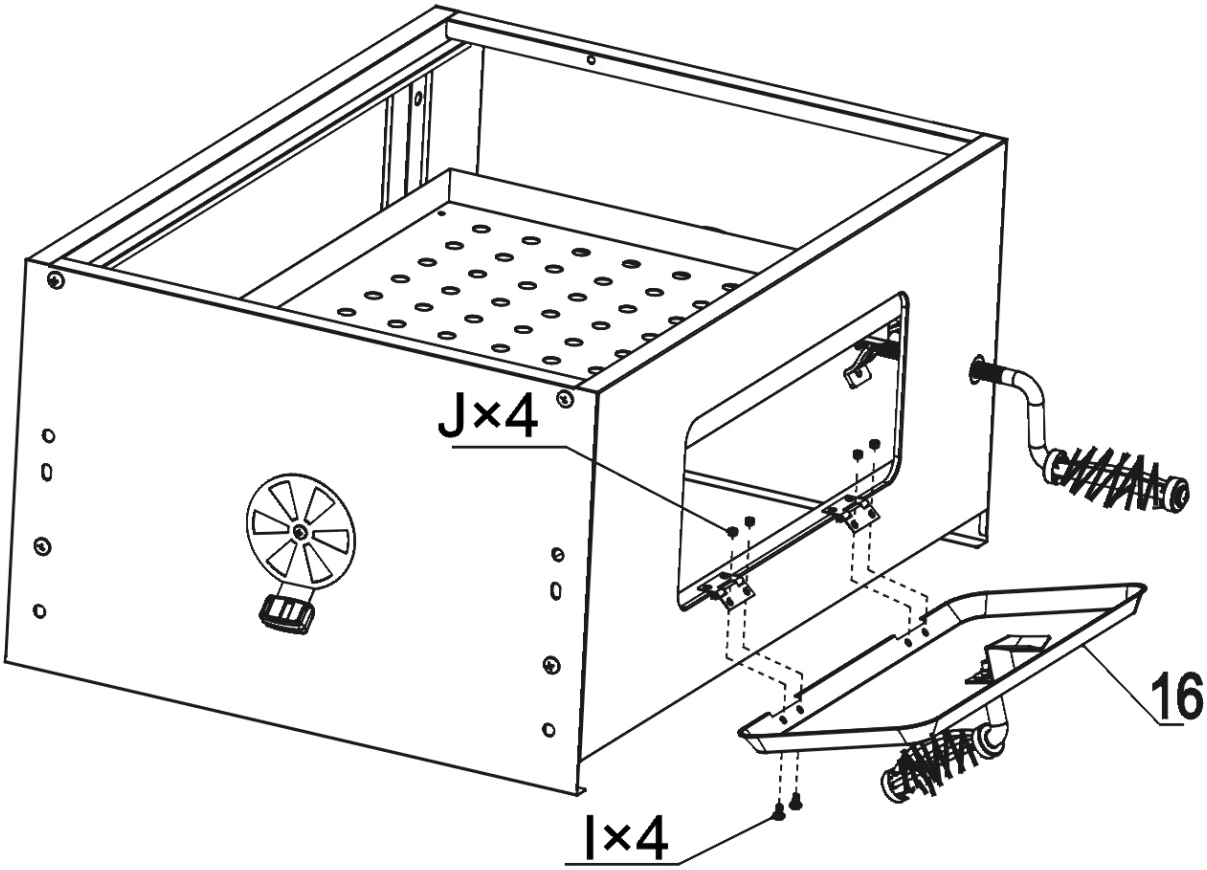

Step 13

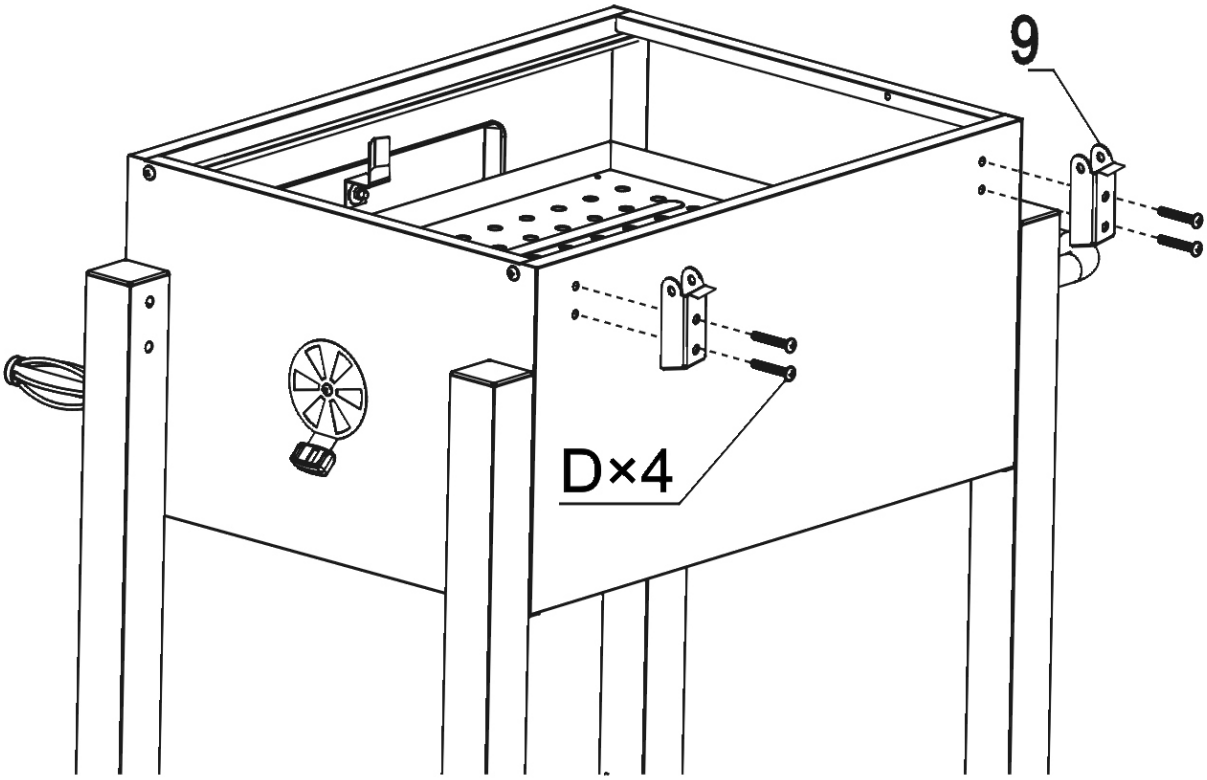

Step 14

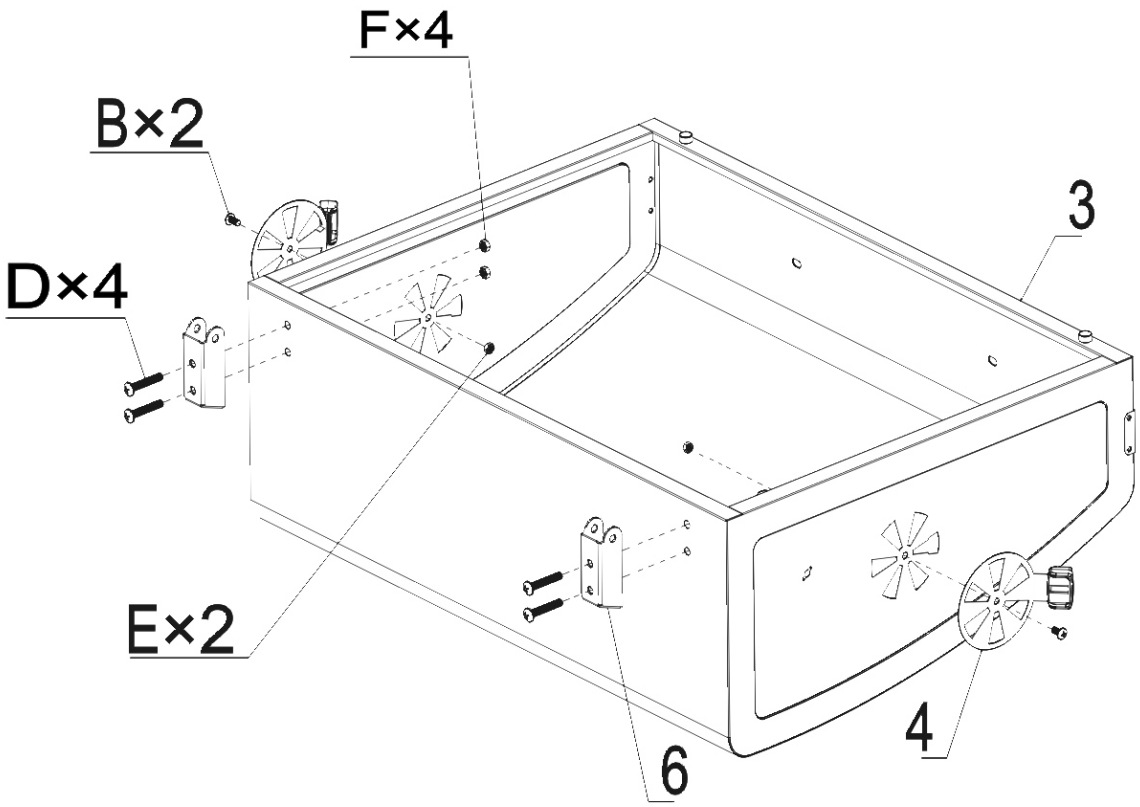

Step 15

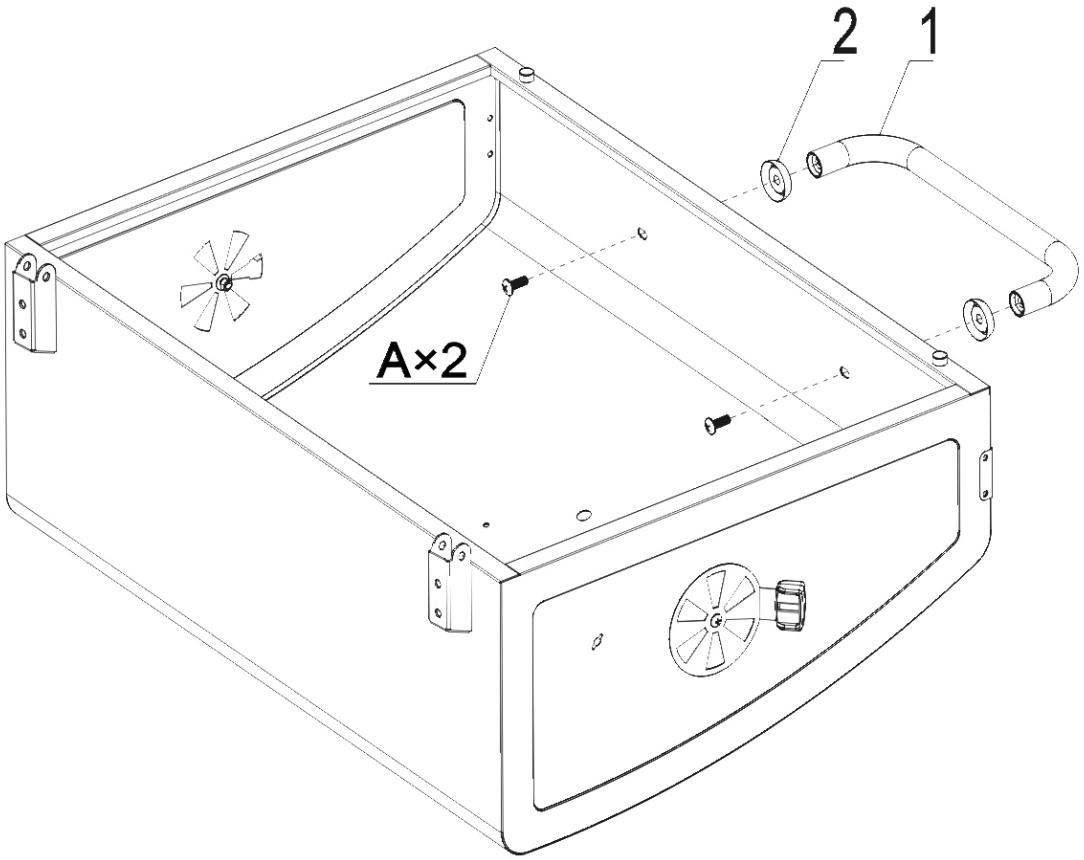

Step 16

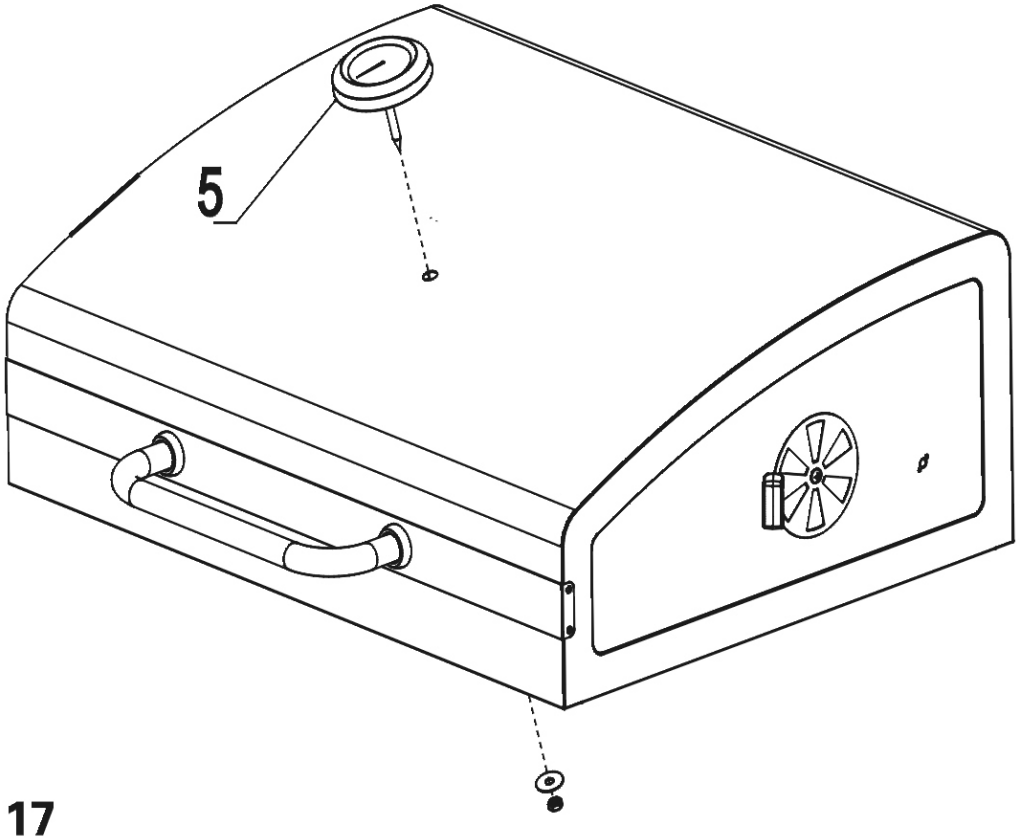

Step 17

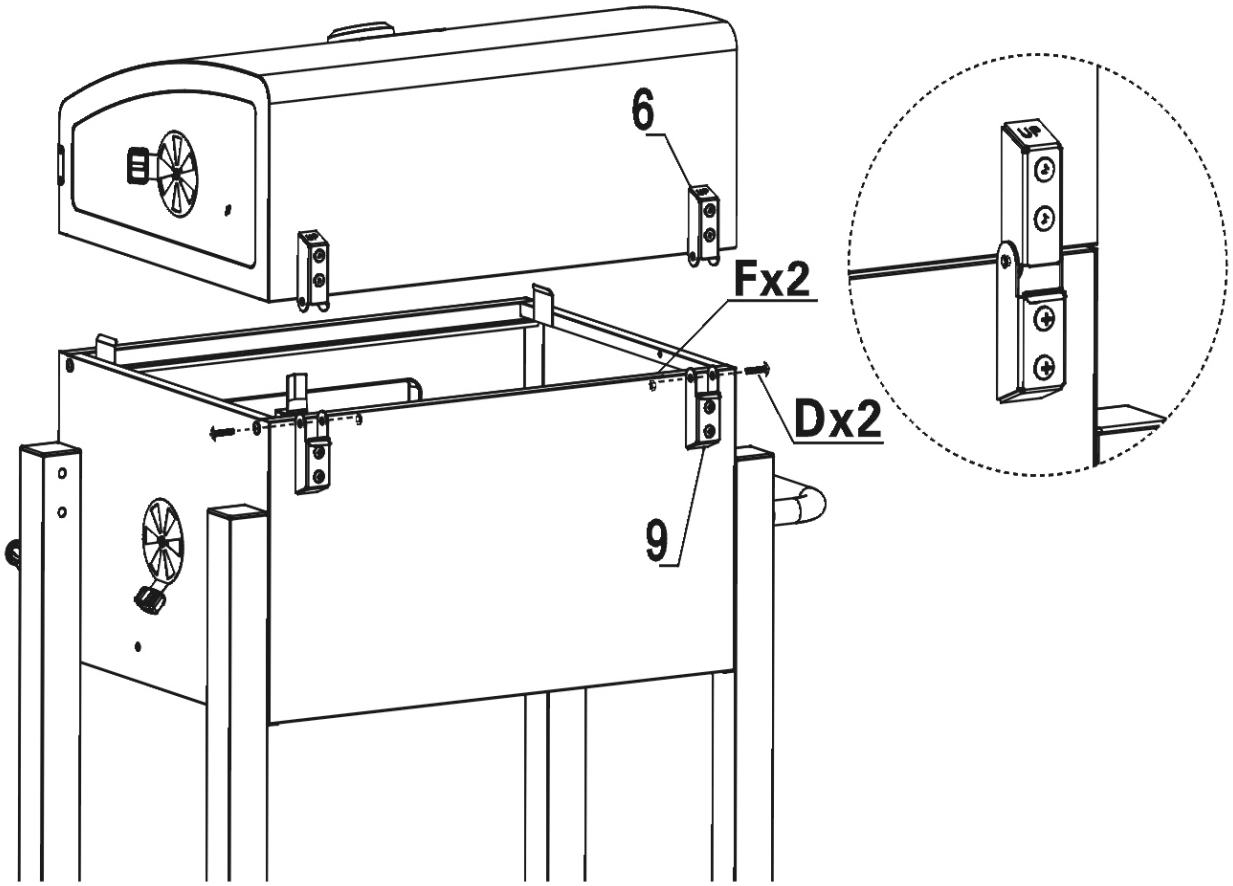

Step 18

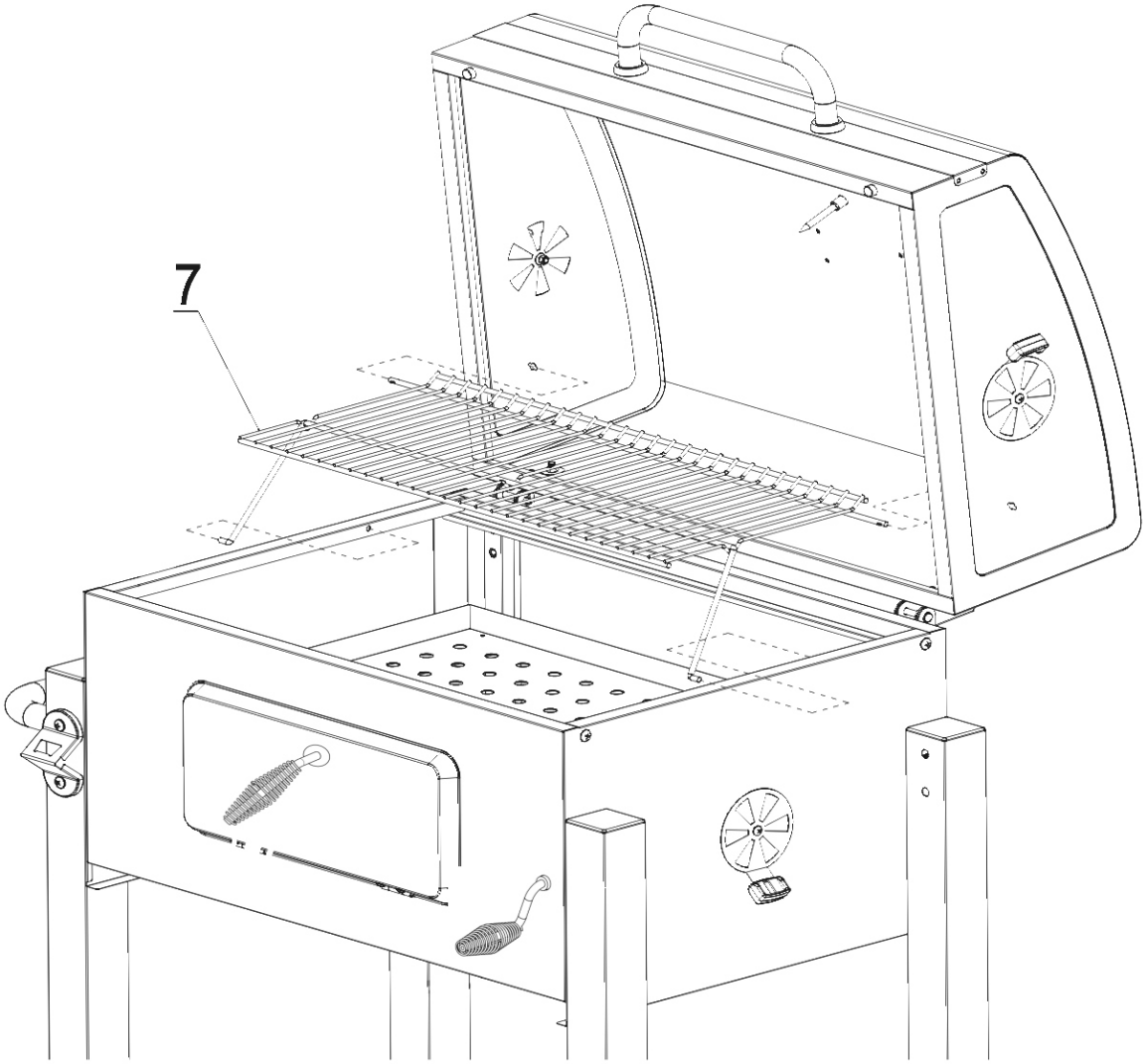

Step 19

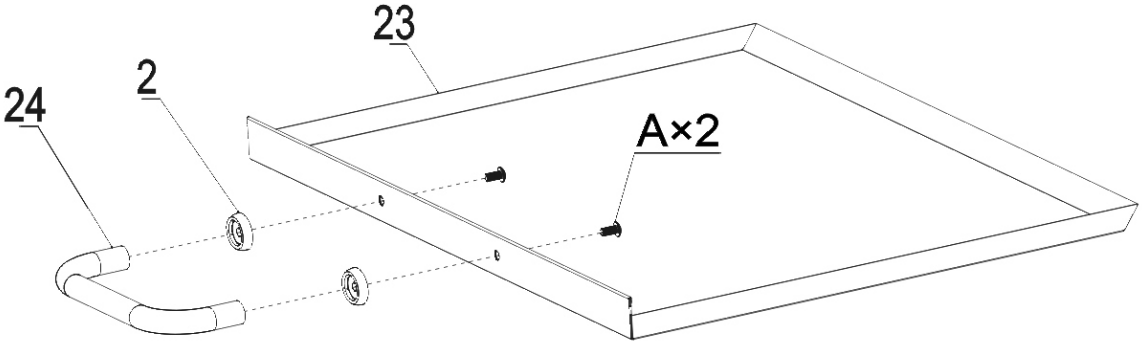

Step 20

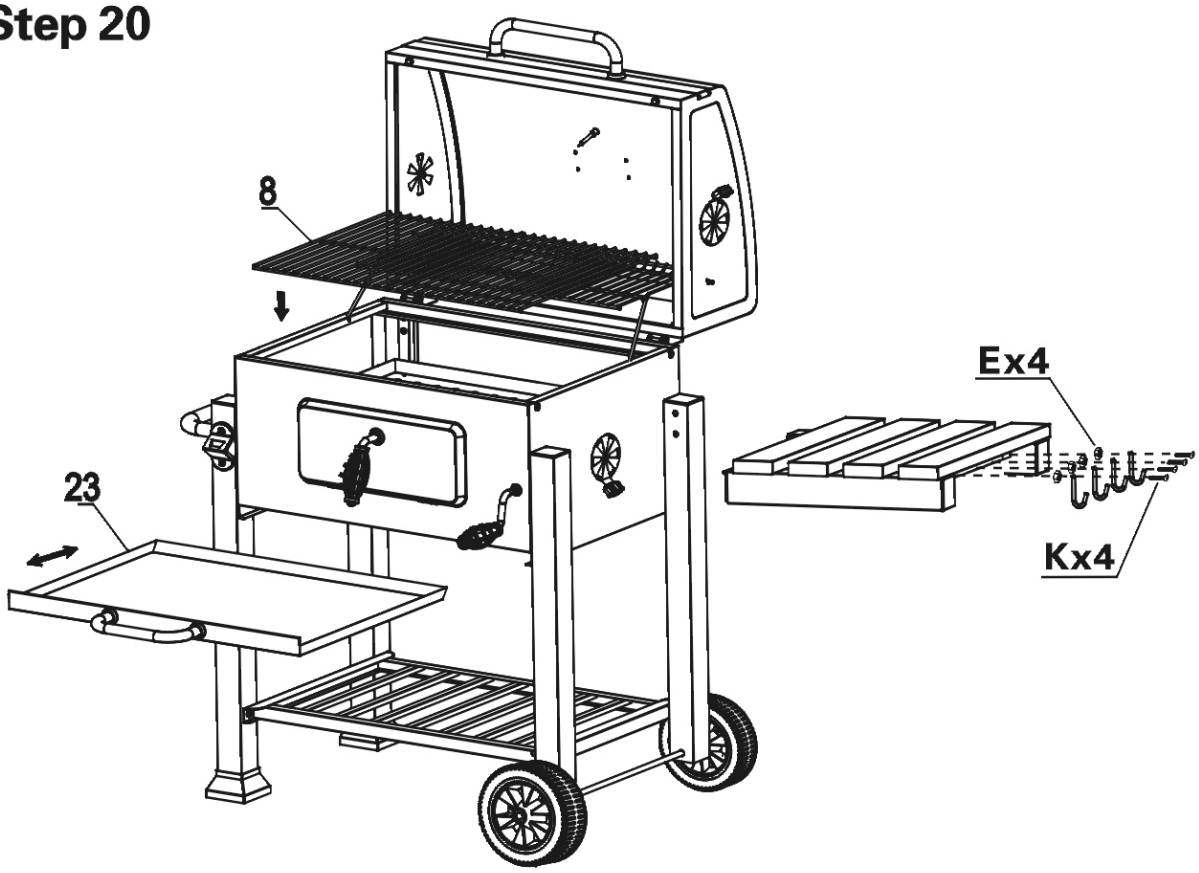

Step 21

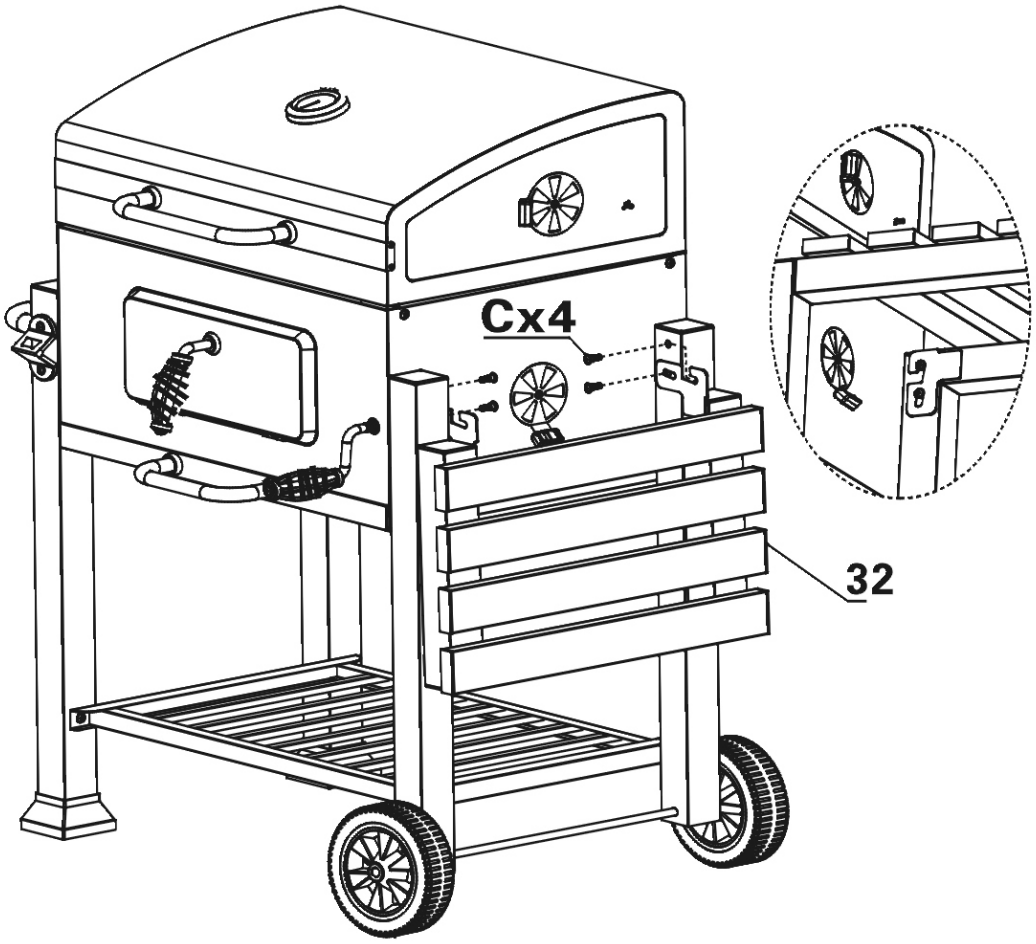

The barbecue is ready for use now.
The barbecue can be disassembled in the reverse order.

Instruction for use

1.The barbecue must be installed on a secure level base before use.
2.The barbecue shall be heated up and the fuel kept red hot for at least 30 min before the first cooking.
3.The maximum amount of charcoal for the barbecue is about 2.0 kg.
4.The correct method of ignition:
a) Put 3 or 4 firelighters in the middle of the charcoal grid and ignite it with a match.
b) Place some pieces of charcoal around each firelighter.Add more charcoal to form a pyramid formation when combustion is established.
c) When the charcoal is burning well,then spread it evenly over the surface.
5.Do not cook before the fuel has a coating of ash.
6.WARNING!This barbecue will become very hot,do not move it during operation.
7.Do not use indoors!

WARNING! Keep away from the reach of children

HOWARM

You've reached the end of the guide. With proper use and regular care, the product will continue to deliver reliable performance and comfort for years to come. If you ever need assistance, our support team is always ready.