https://howarm.co.uk/

HOWARM

BBQ GRILL

/ MODEL: DS-35

USER MANUAL

· Please read and save these instructions

IMPORTANT SAFETY NOTICE AND WARNINGS

Notice:

1.Never place more than 2.8kgs charcoal on the firebox when in use.

2.Never place more than 5kgs on the front shelf. Do not lean on the front shelf.

Warning:

1.Only use this grill on a hard, level, non-combustible, stable surface capable of supporting the weight of the weight of the grill. Never use on wooden or other surfaces that could burn.

2.For outdoor use only. Do not operate grill indoors or in an enclosed area.

3.We recommend the use of a Charcoal Chimney Starter to avoid the dangers associated with charcoal lighting fluid. If you choose to use charcoal lighting fluid, only use lighting fluid approved for lighting charcoal. Carefully read manufacturer' s warnings and instructions on the charcoal lighting fluid safety away from grill.

4.Do not use gasoline, kerosene or alcohol for lighting charcoal. Use of any of these or similar products could cause an explosion possibly leading to severe bodily injury.

5.Never add charcoal lighting fluid to hot or even warm coals as flashback may occur causing severe burns.

6.Please grill in an area where children and pets cannot cone into contact with unit. Close supervision is necessary when grill is in use.

7.Do not leave grill unattended when in use.

8.Do not store or use grill near gasoline or other flammable liquids, gases or where flammable vapors may be present.

9.Use caution when adjusting charcoal grate and cooking grate height. Handle may be hot when in use.

10.Grill is not when in use. To avoid burns:

i)DO NOT attempt to move the grill.

ii)Brace grill so the unit does not accidentally move.

iii) Wear protective gloves or oven mitts.

iv) DO NOT touch any hot grill surfaces.

v) DO NOT wear loose clothing or allow hair to come in contact with grill.

11.Do not exceed a temperature of 350°C. Do not allow charcoal and/or wood to rest on the walls of grill. Doing so will greatly reduce the life of the metal and finish of your grill.

12.Never leave coals and ashes in grill unattended. Before grill can be left unattended, remaining coals and ashes must be removed from grill. Use caution to protect yourself and property. Carefully place remaining coals and ashes in non-combustible metal container and saturate completely with water. Allow coals and water to remain in metal container 24 hours prior to disposing.

13.After each use, clean the grill thoroughly and apply a light coating of vegetable oil to interior to prevent rusting.

14.Store the grill out of reach children and in a dry location when not in use.

15.Remove all stickers and labels before first use.

16.Properly dispose of all packaging material.

17.Recommendation that the barbecue shall be heated up and the fuel kept red hot for at lease 30 min prior to the first cooking on the barbecue.

18.The offset firebox only used for smoking not for barbecue.

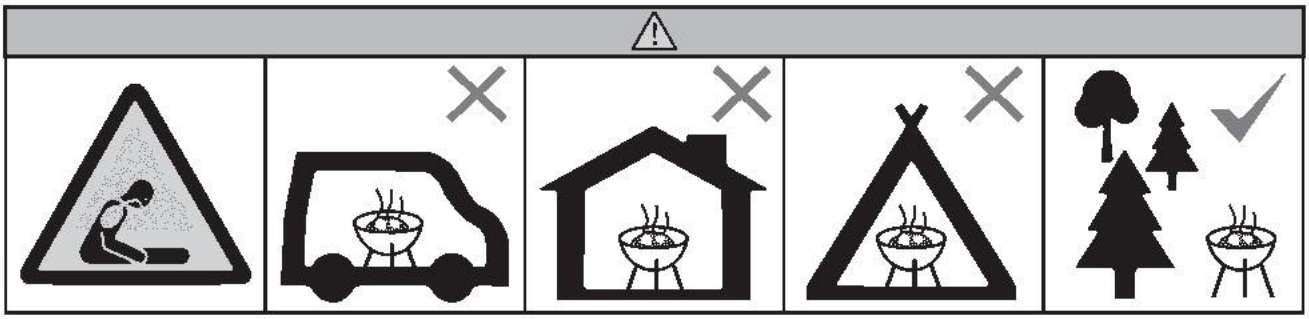

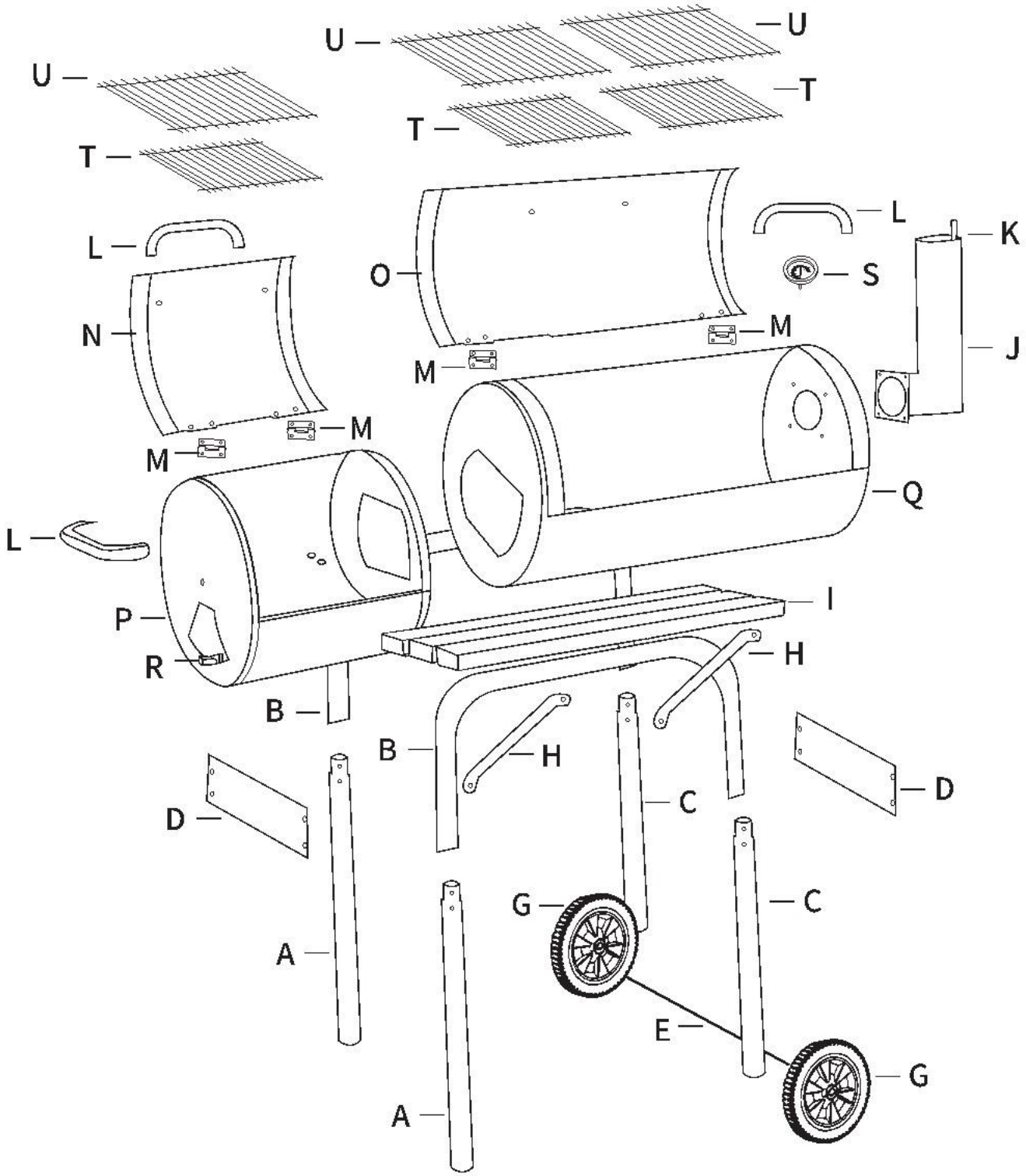
U
U
U
T
T
T
L
L
K
O
S
N
M
J
M
M
M
Q
L
I
P
H
R
B
B
H
D
D
C
C
G
A
E
G
A

STEP 1

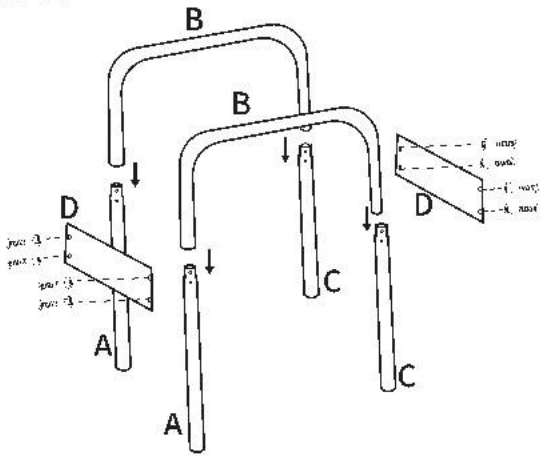

⑥ M6x40 screw:8PCS
③ M6 Nut:8PCS

STEP 2

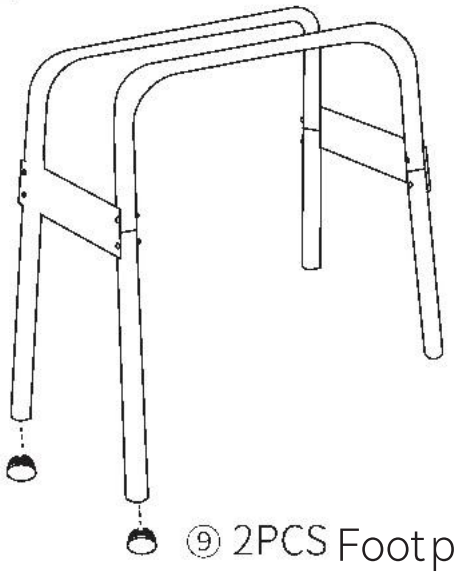

⑨ 2PCS Foot plug

STEP 3

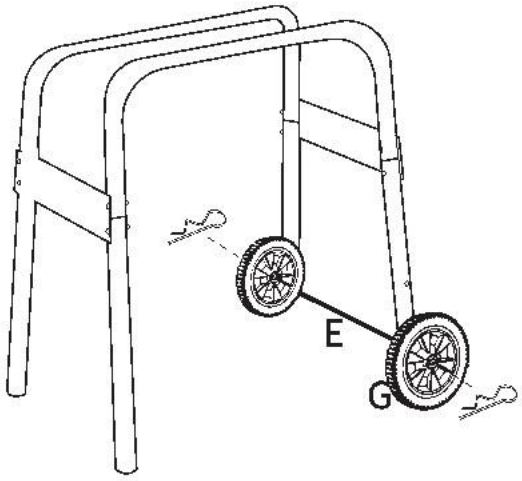

⑤ D1.4 Pin 2PCS

STEP 4

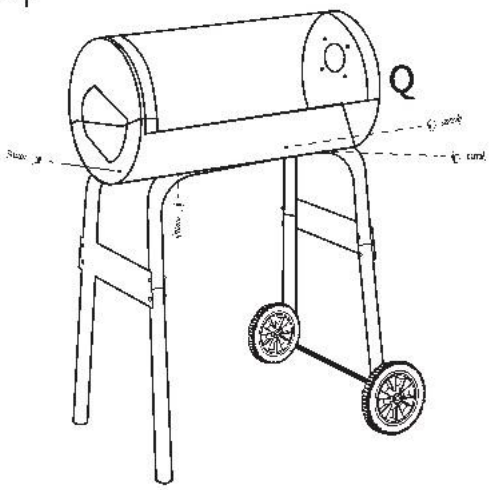

⑥ M6x40 screw:4PCS
③ M6 Nut:4PCS

STEP 5

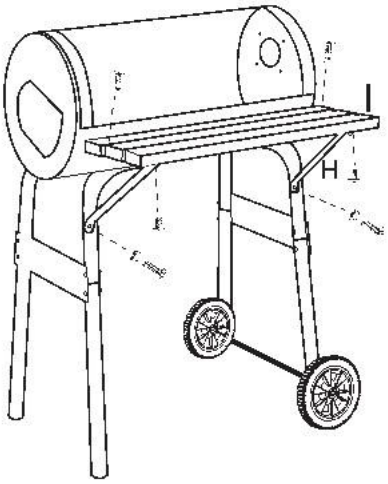

⑥ M6x40 screw:2PCS
① M6x14 screw:4PCS
③ M6 Nut:4PCS

STEP 6

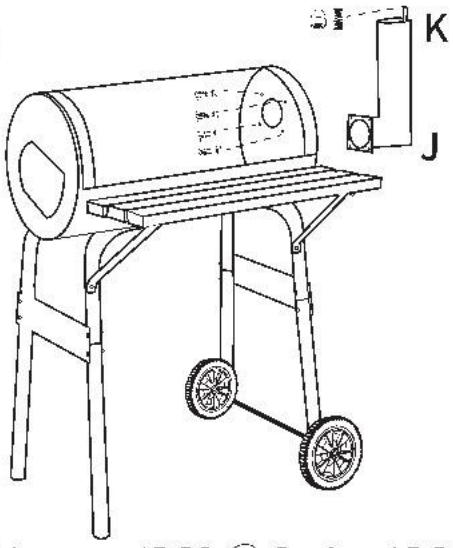

① M6x14 screw:4PCS ⑦ Spring 1PCS
③ M6 Nut:4PCS ⑧ M5 Nut:1PCS

STEP 7

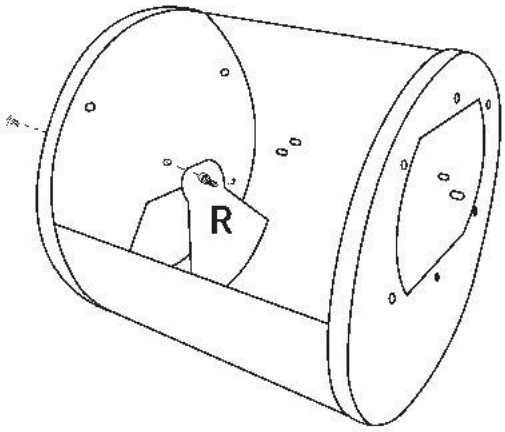

① M6x14 screw:1PCS
③ M6 Nut:1PCS

STEP 8

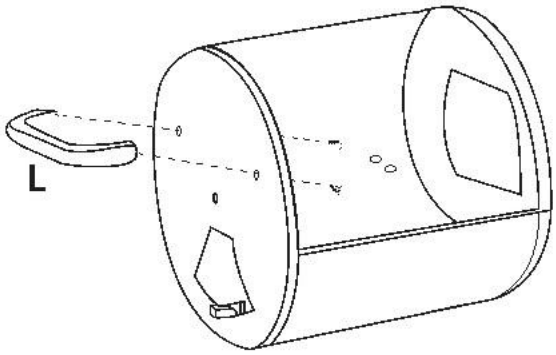

① M6x14 screw:2PCS

STEP 9

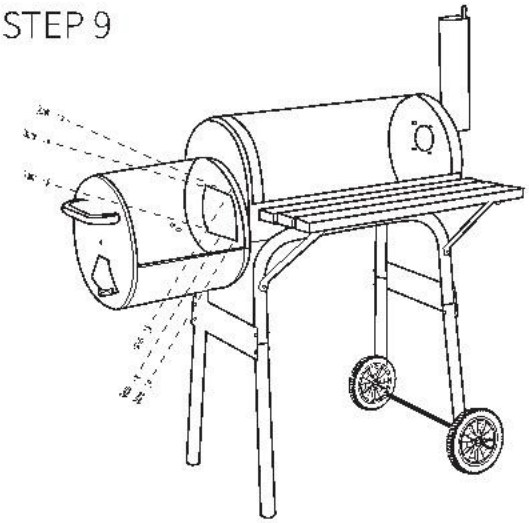

① M6x14 screw:6PCS
③ M6 Nut:6PCS

STEP 10

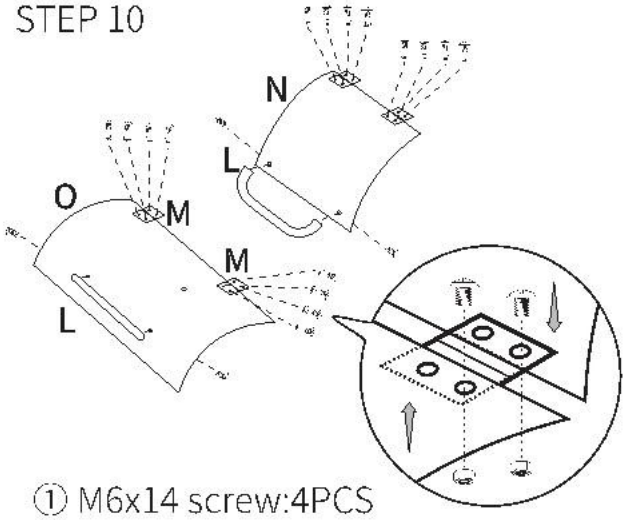

① M6x14 screw:4PCS
② M4x10 screw:16PCS
④ M4 Nut:16PCS

STEP 11

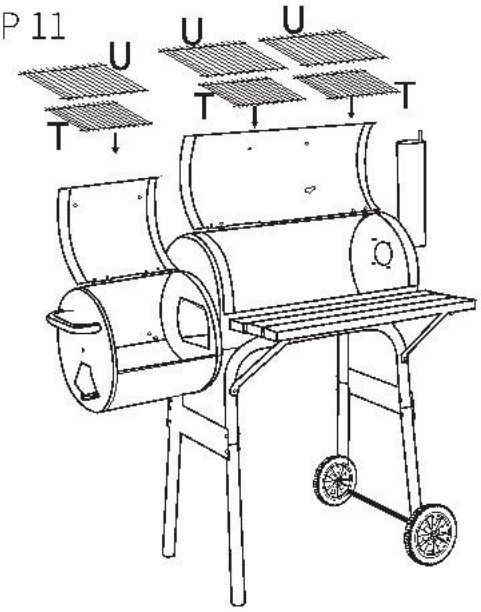

STEP 12

A	2PCS Long Leg
B	2PCS Leg
C	2PCS Short Leg
D	2PCS Right Leg Brace
E	1PCS Axle
G	2PCS Wheels
H	2PCS Front Table Supports
I	1PCS Front Shelf
J	1PCS Chimney
K	1PCS Chimney Damper
L	3PCS Push Handle
M	4PCS Hinge
N	1PCS Samll cover

O	1PCS Big Cover
P	1PCS Samll Fire Box
Q	1PCS Big Fire Box
R	1PCS Firebox Air Shutter
S	1PCS Thermometer
T	3PCS Charcoal Grate
U	3PCS Cooking Grills
①	M6X14 Screw 21PCS
②	M4X10 Screw 16PCS
③	M6 Nut 27PCS
④	M4 Nut 16PCS
⑤	D1.4 Pin 2PCS
⑥	M6X40mm Screw:14PCS
⑦	Smokerstack Spring 1PCS
⑧	M5 Nut 1PCS
⑨	2PCS

HOWARM

You've reached the end of the guide. With proper use and regular care, the product will continue to deliver reliable performance and comfort for years to come. If you ever need assistance, our support team is always ready.