https://howarm.co.uk/

- The barbecue shall be heated up and the fuel kept red hot for at least 30 min prior to the first cooking.
- Do not cook before the fuel has a coating of ash.
- WARNING! This barbecue will become very hot, do not move it during operation.
- Do not use indoors!
- WARNING! Do not use spirit or petrol for lighting or re-lighting!
- WARNING! Keep children and pets away.

HOWARM

BBQ GRILL

/ MODEL: SK620M

USER MANUAL

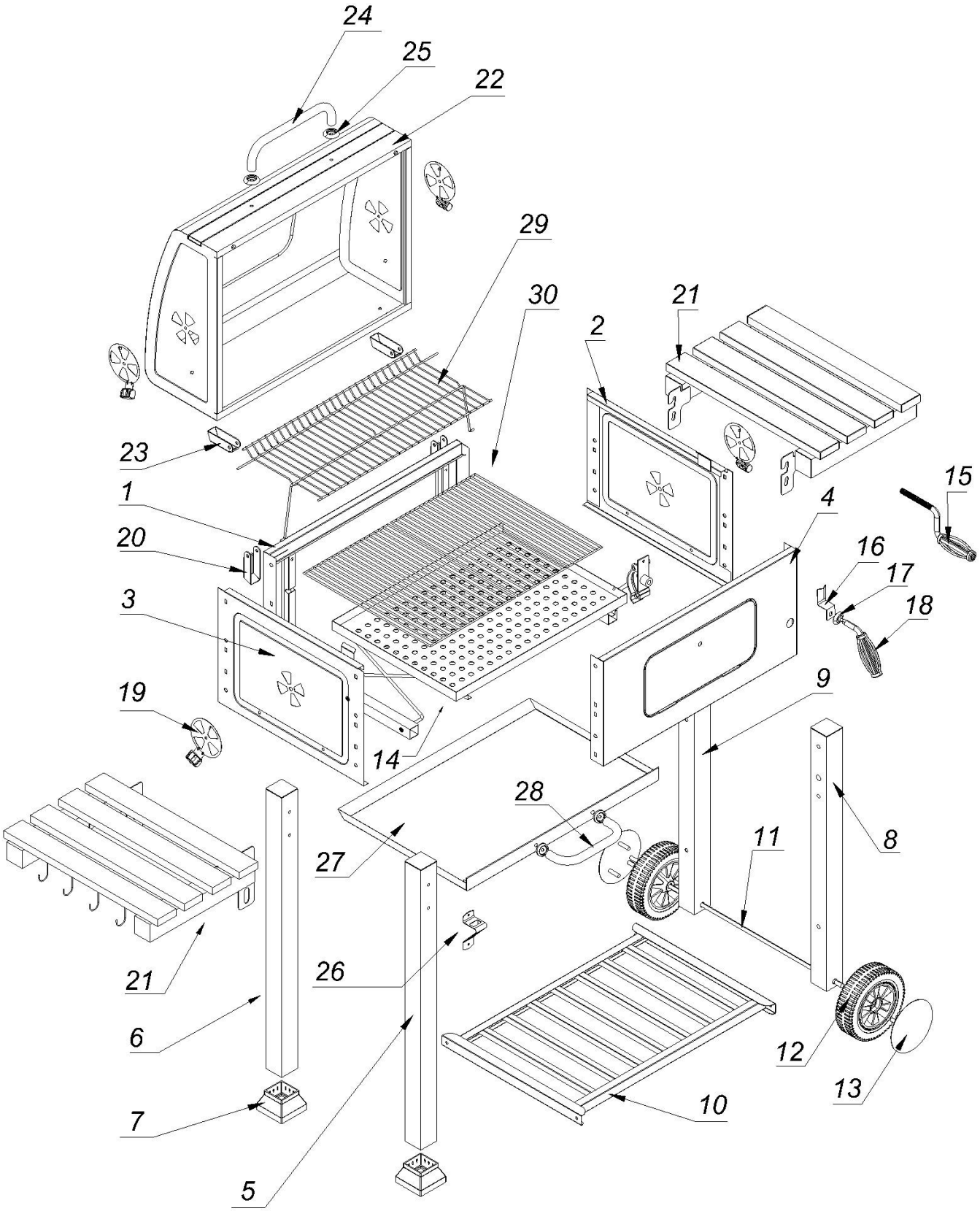
24
25
22
29
30
21
2
23
1
20
3
19
15
4
16
17
18
9
14
28
27
11
8
21
26
6
12
13
7
10
5

NO.	Image	Unit
1	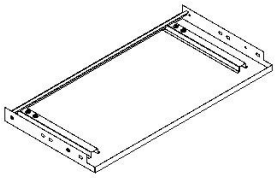	1PC
2	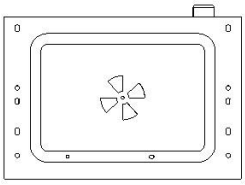	1PC
3	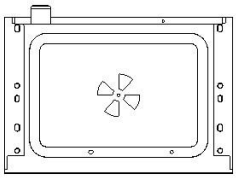	1PC
4	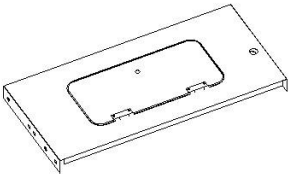	1PC
5	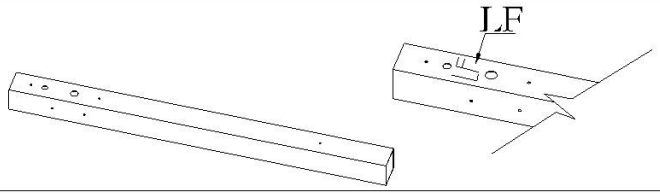	1PC
6	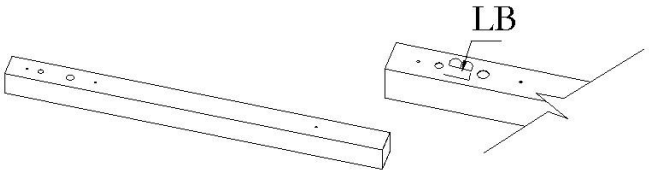	1PC
7	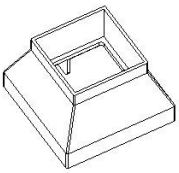	2PCS
8	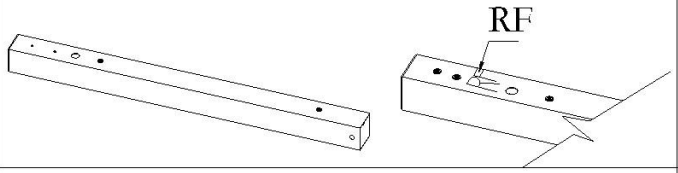	1PC
9	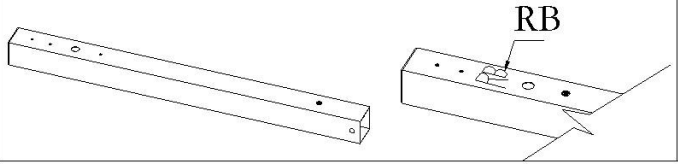	1PC

NO.	Image	Unit
10	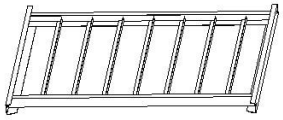	1PC
11	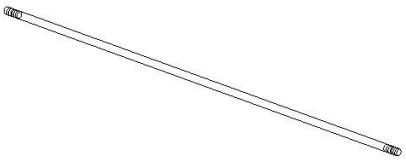	1PC
12		2PCS
13		2PCS
14	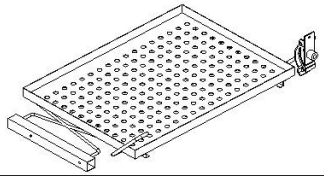	1PC
15	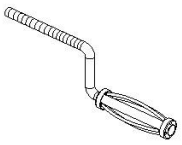	1PC
16	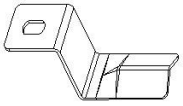	1PC
17	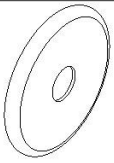	1PC
18	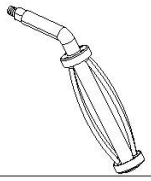	1PC

NO.	Image	Unit
19	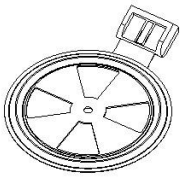	4PCS
20	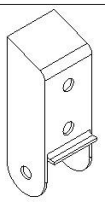	2PCS
21	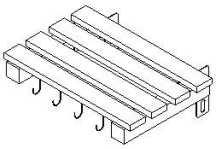	2PCS
22	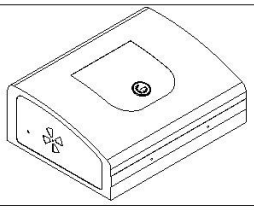	1PC
23	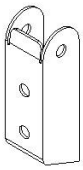	2PCS
24		1PC
25	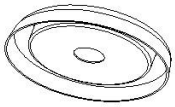	4PCS
26		1PC
27	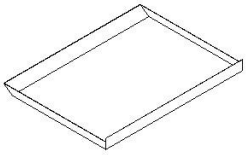	1PC

NO.	Image	Unit
28	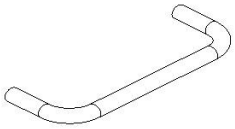	1PC
29		1PC
30	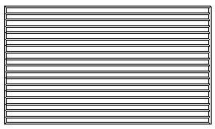	2PCS

Hardware list			
A	M6x12 Screw		29pcs
B	M6x3 Screw		4 pcs
C	M6x45 Screw		4 pcs
E	M5x16 Screw		4 pcs
F	M5x28 Screw		2pcs
G	M6 Half Screw Thread Bolt		8 pcs
H	M6 Nut		9 pcs
I	M10 Nut		2 pcs
J	Hinge Pin		2 pcs
K	Cotter Pin		3 pcs
L	D6 Washer		13 pcs
M	D6 Spring washer		13 pcs
N	M5x28 Screw		1 pc

step1

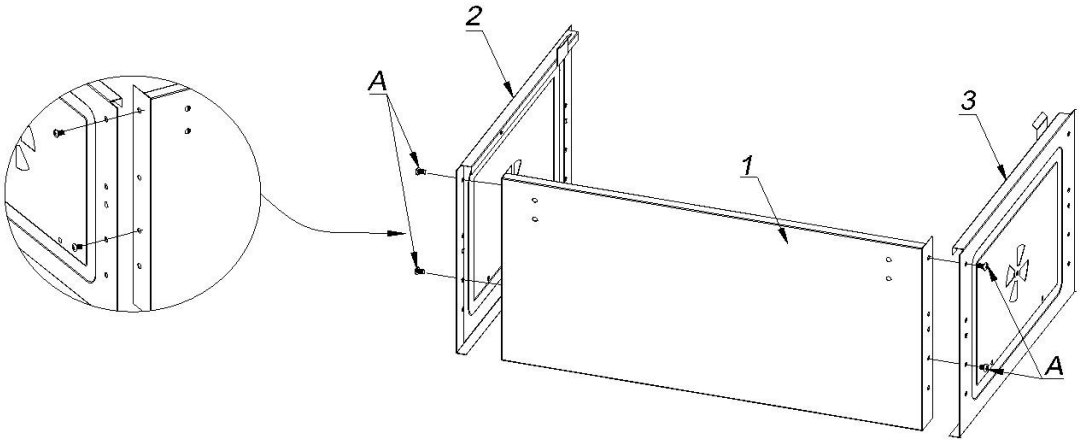

step 2

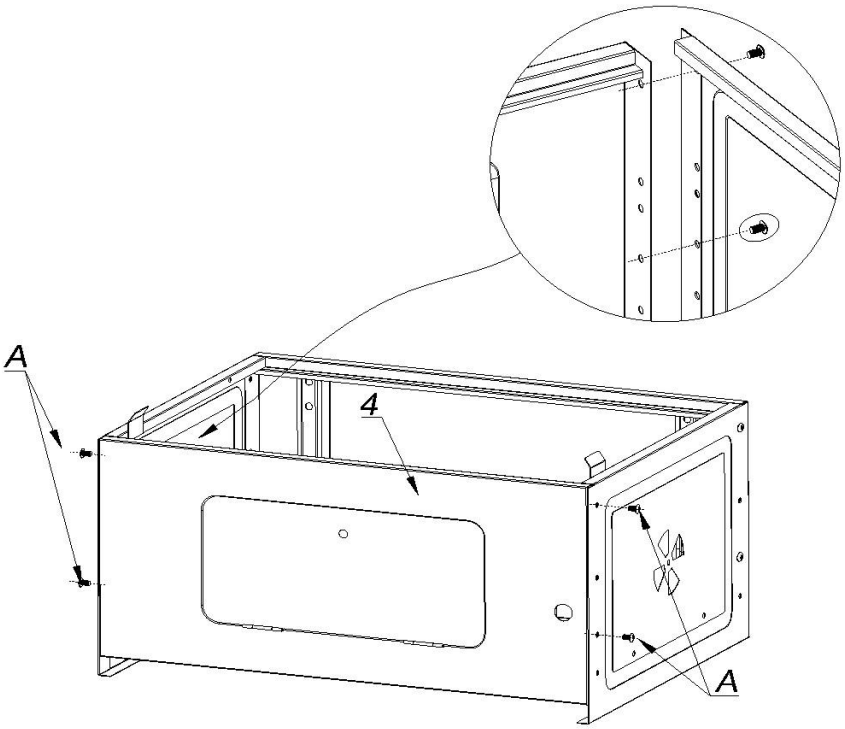

step 3

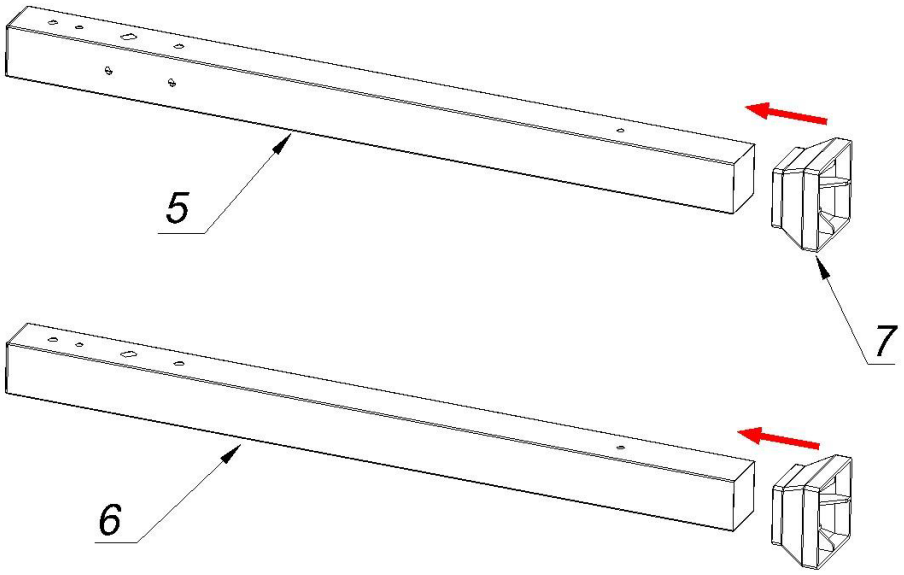

step 4

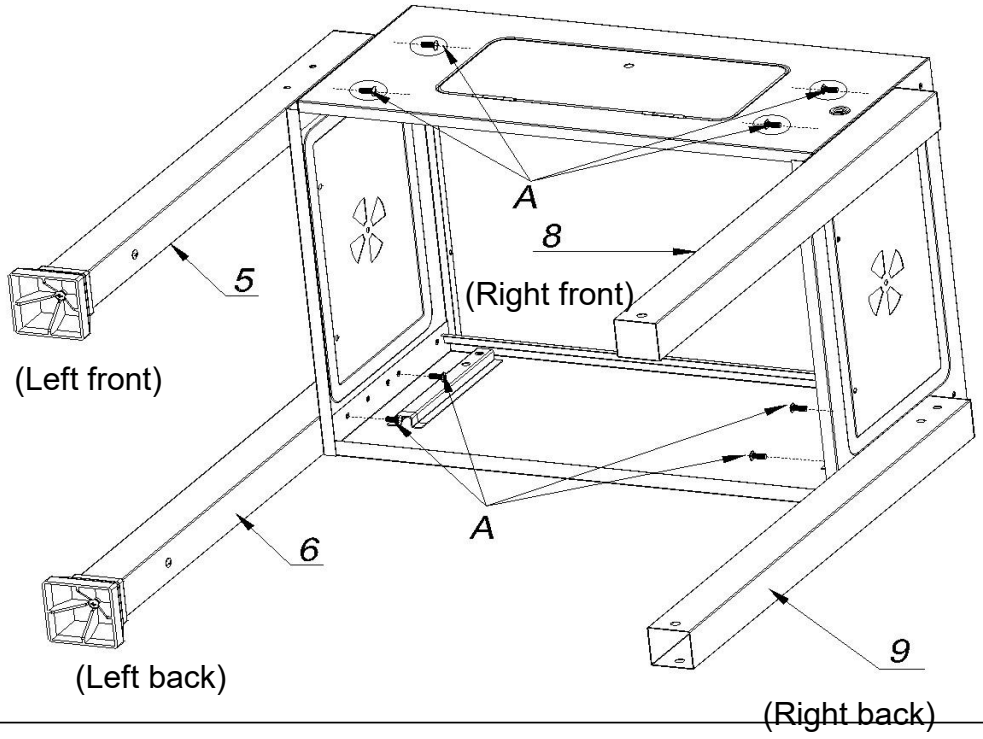

step 5

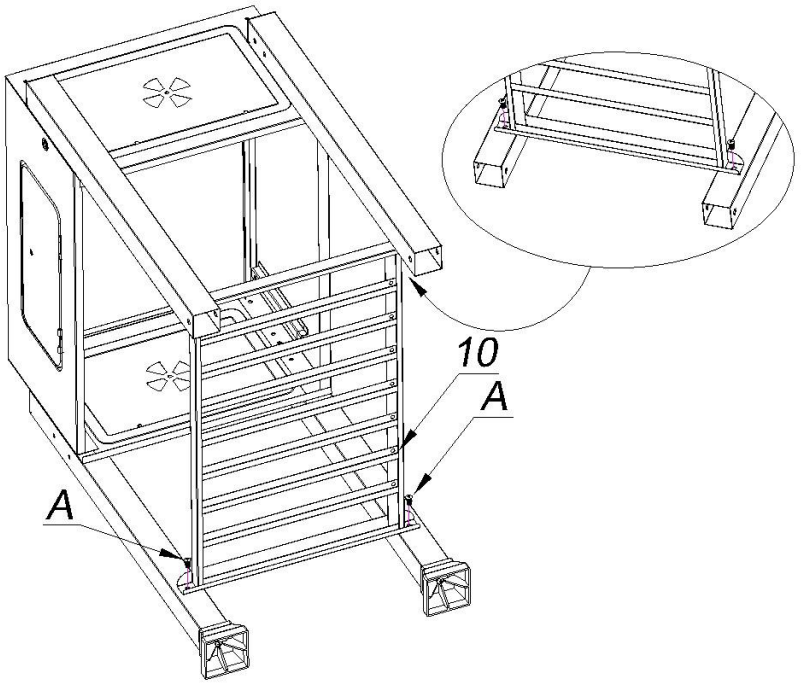

step 6

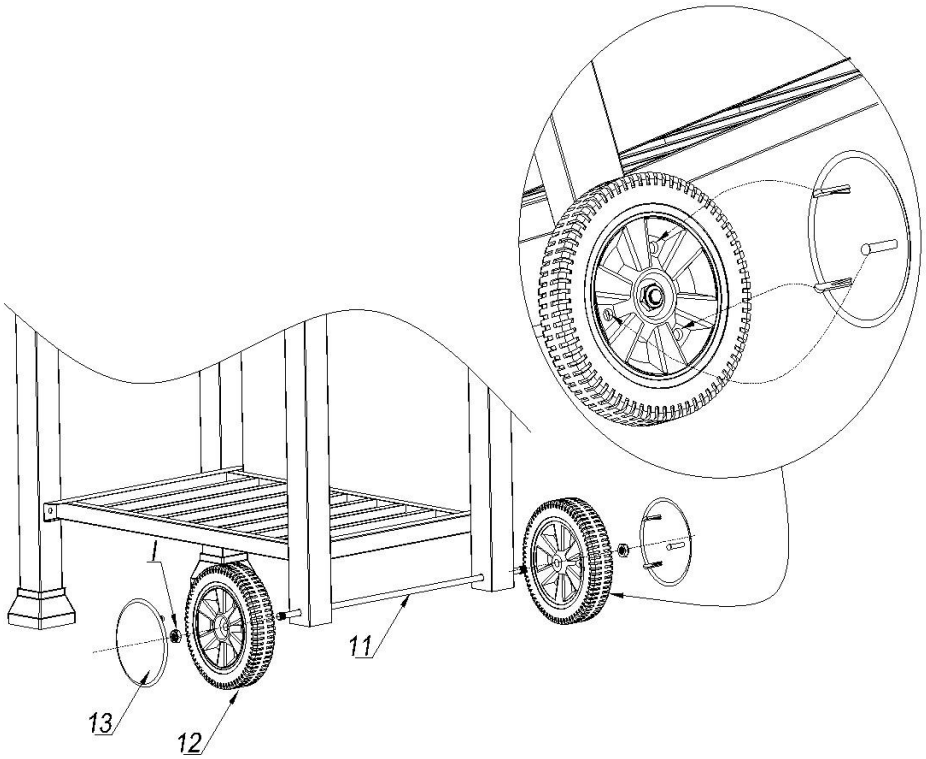

step 7

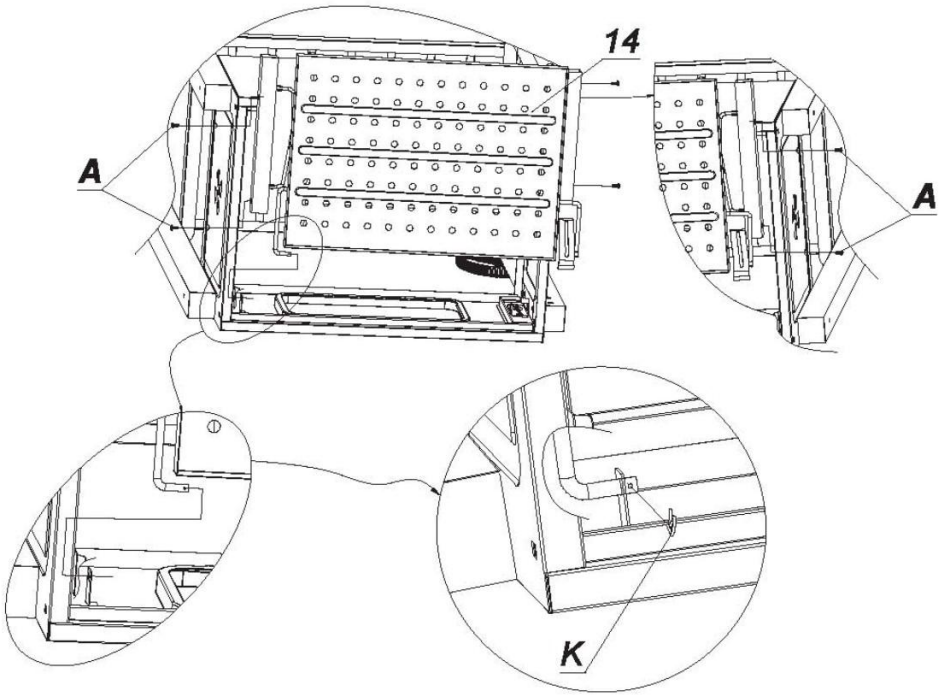

step 8

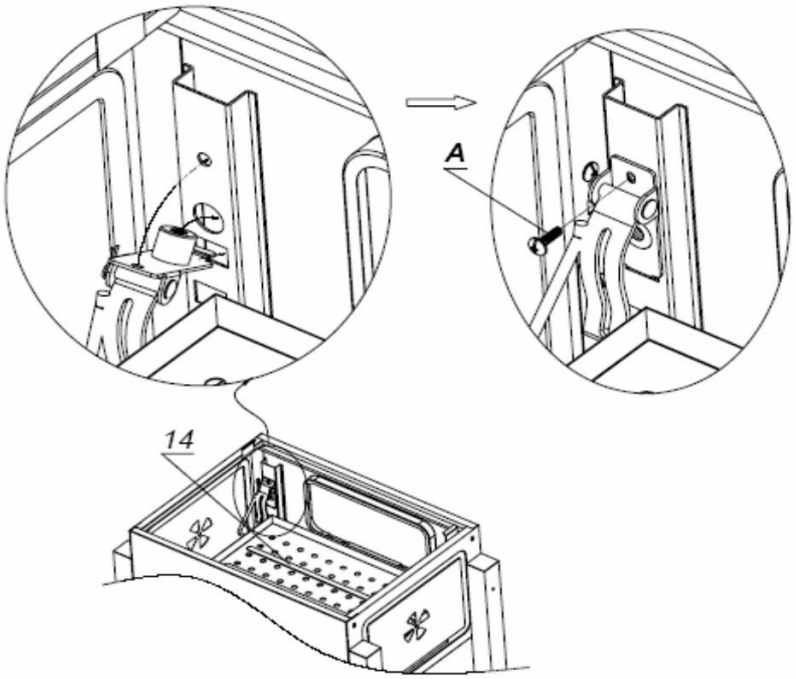

step 9

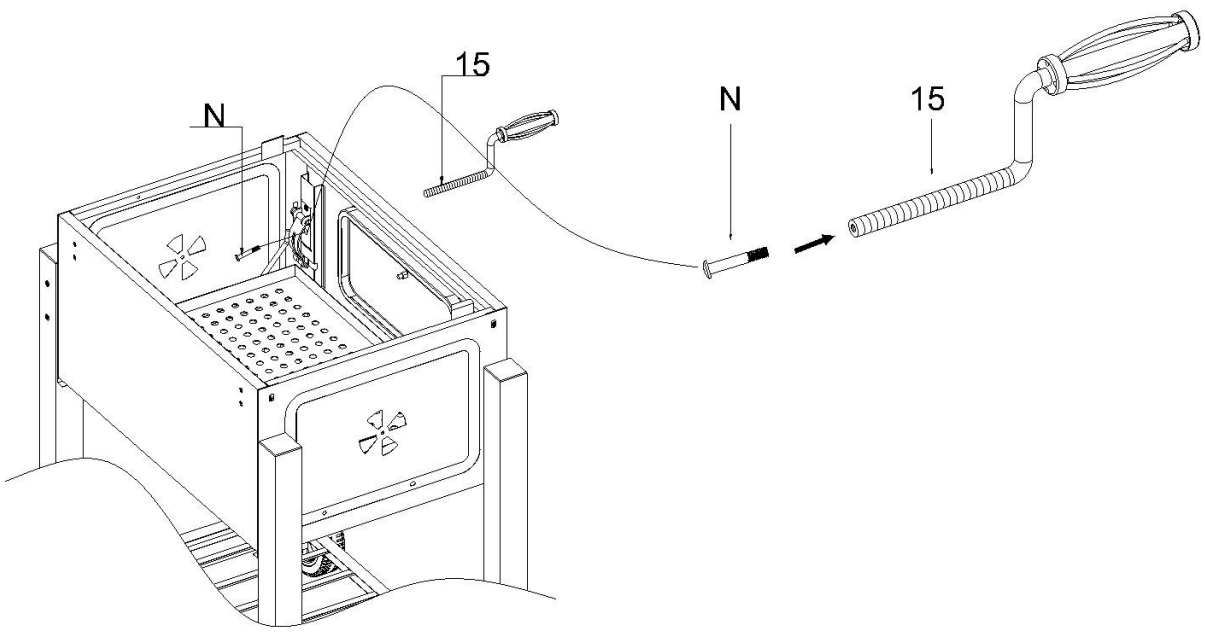

step 10

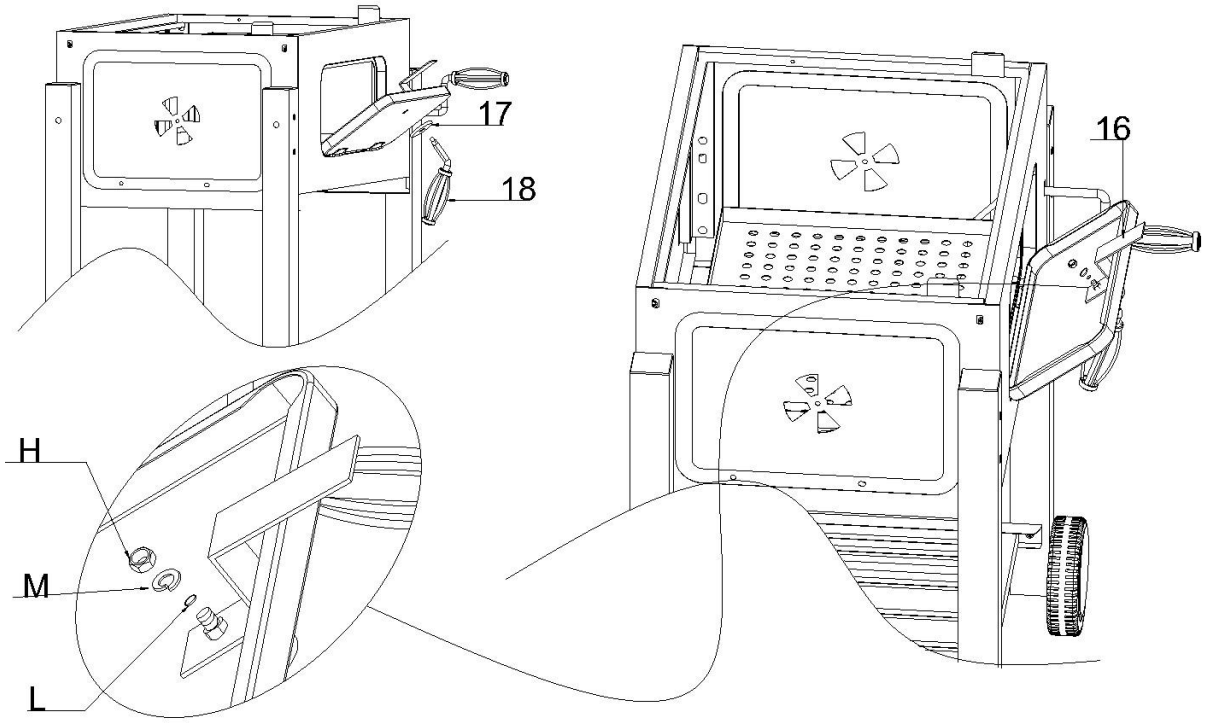

step 11

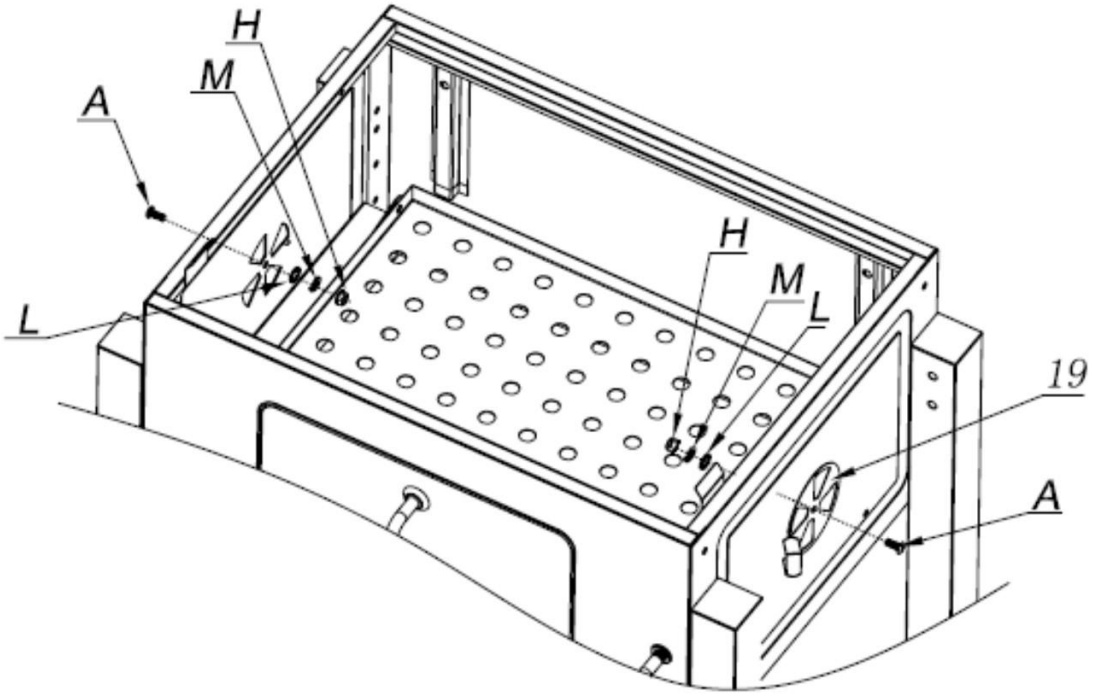

step 12

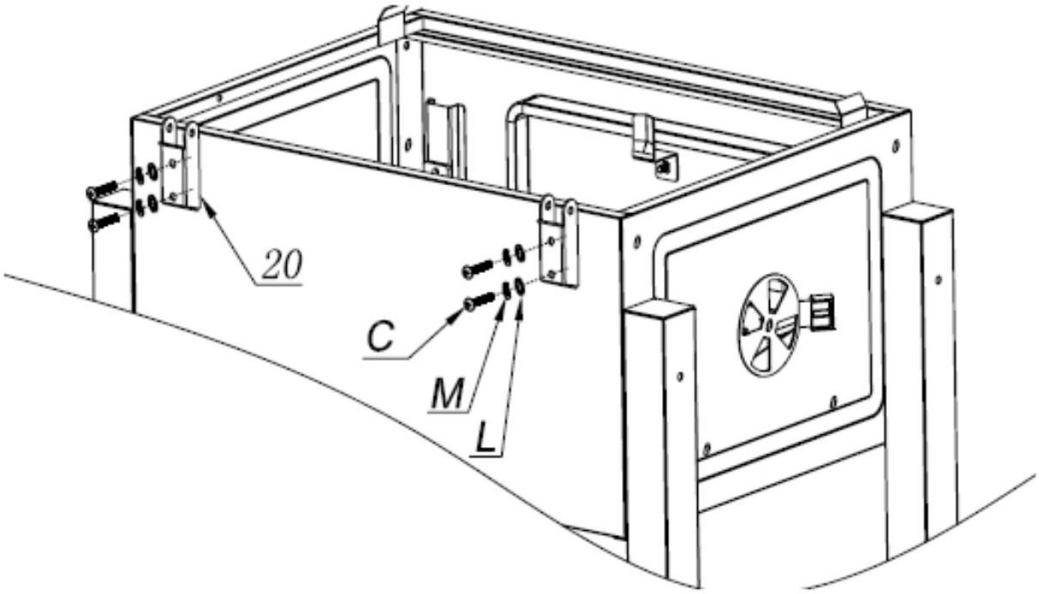

step 13

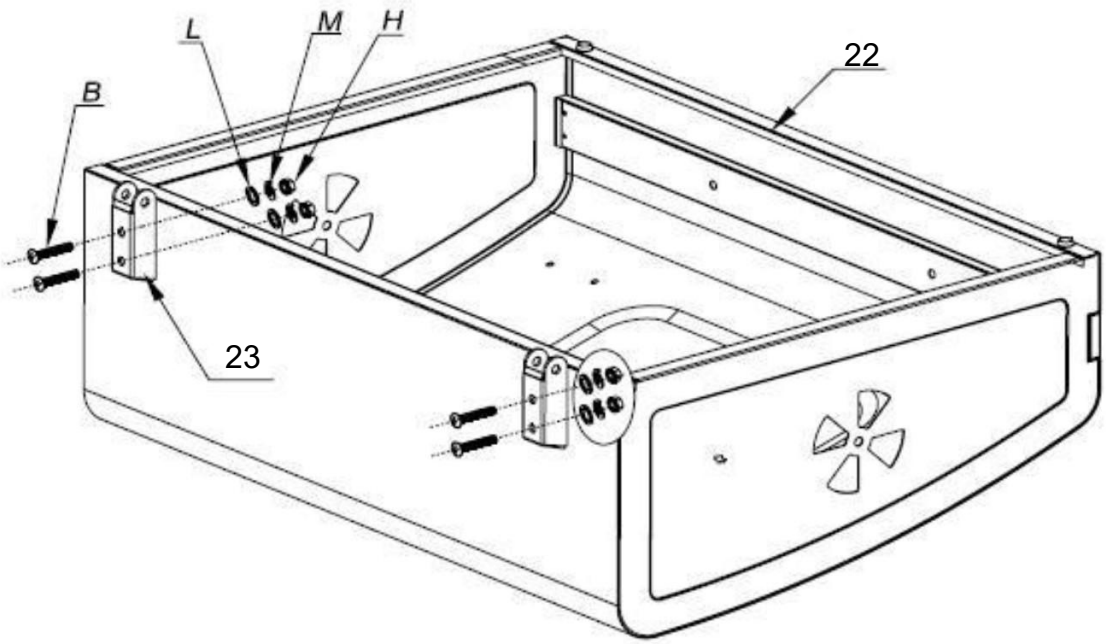

step 14

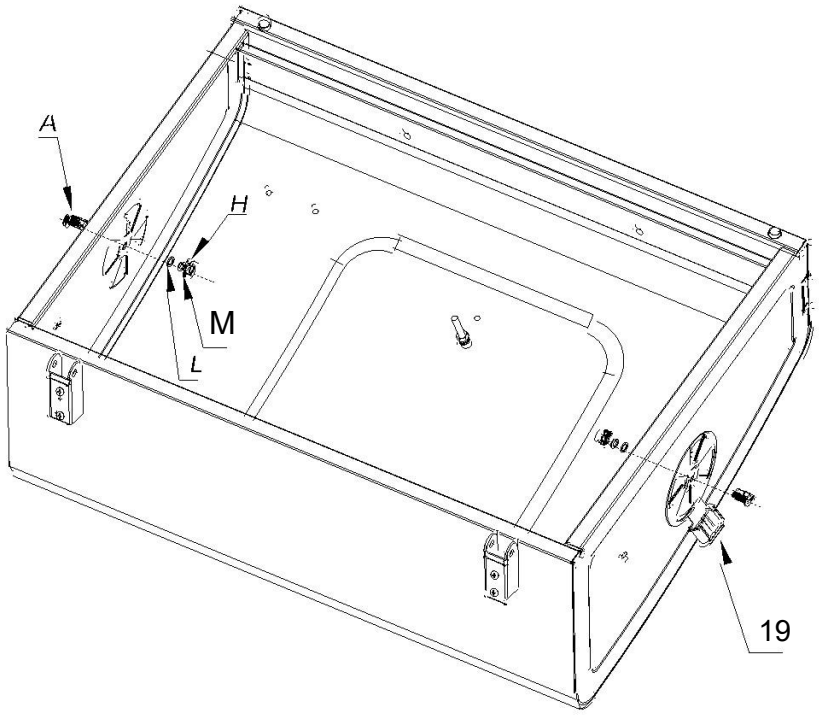

step 15

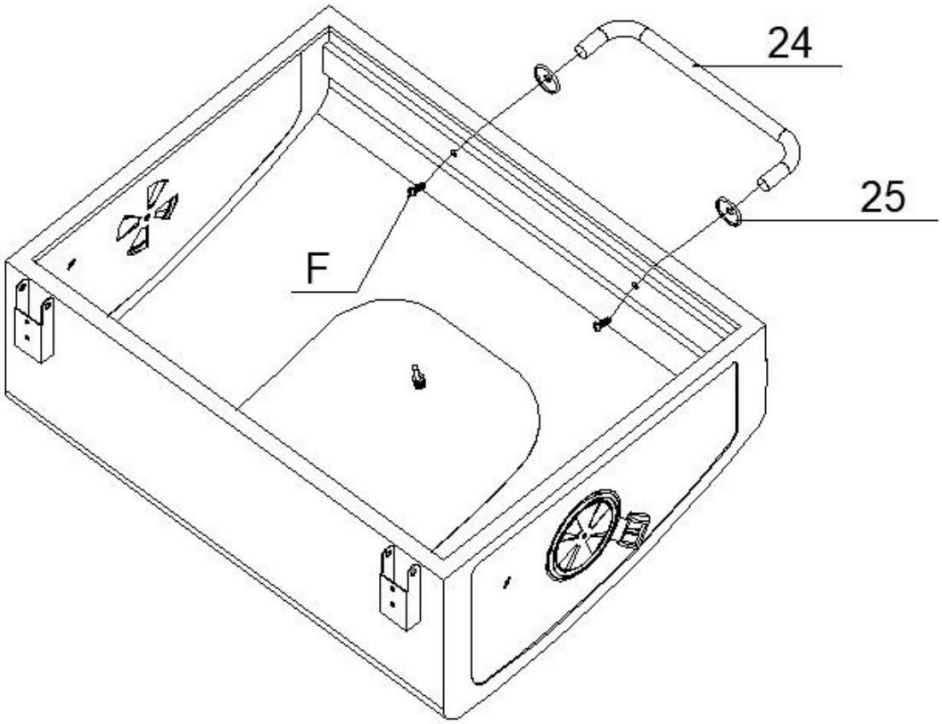

step 16

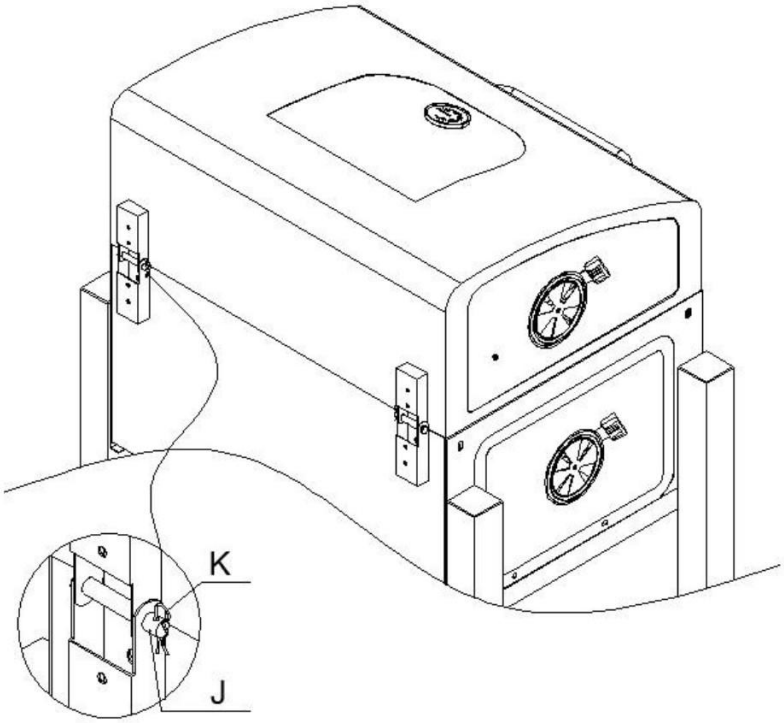

step 17

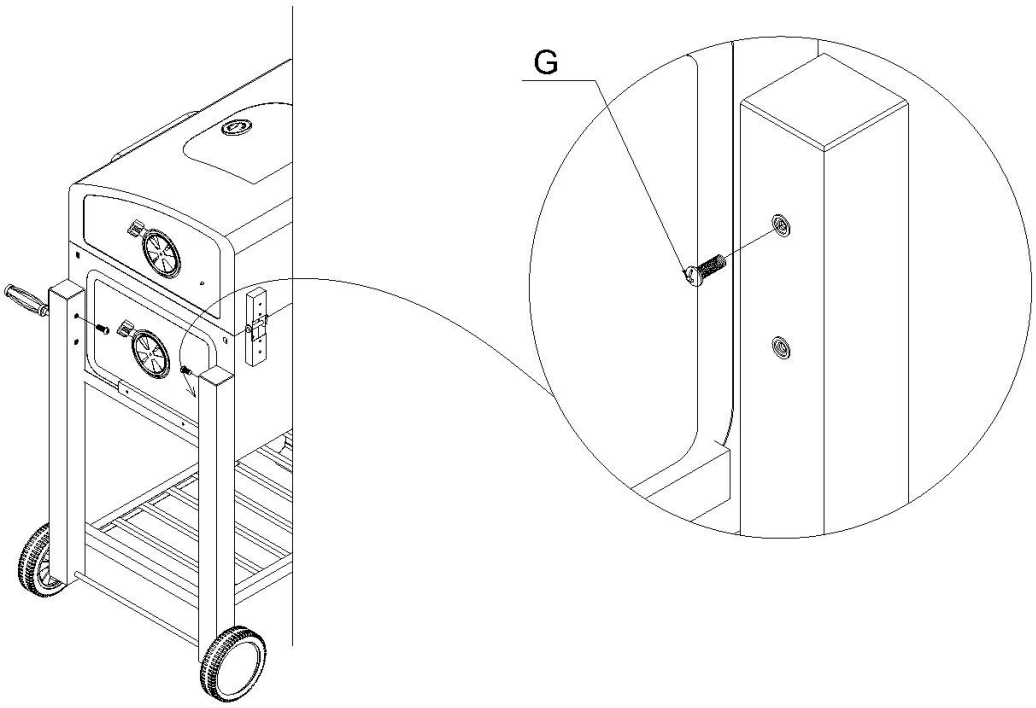

step 18

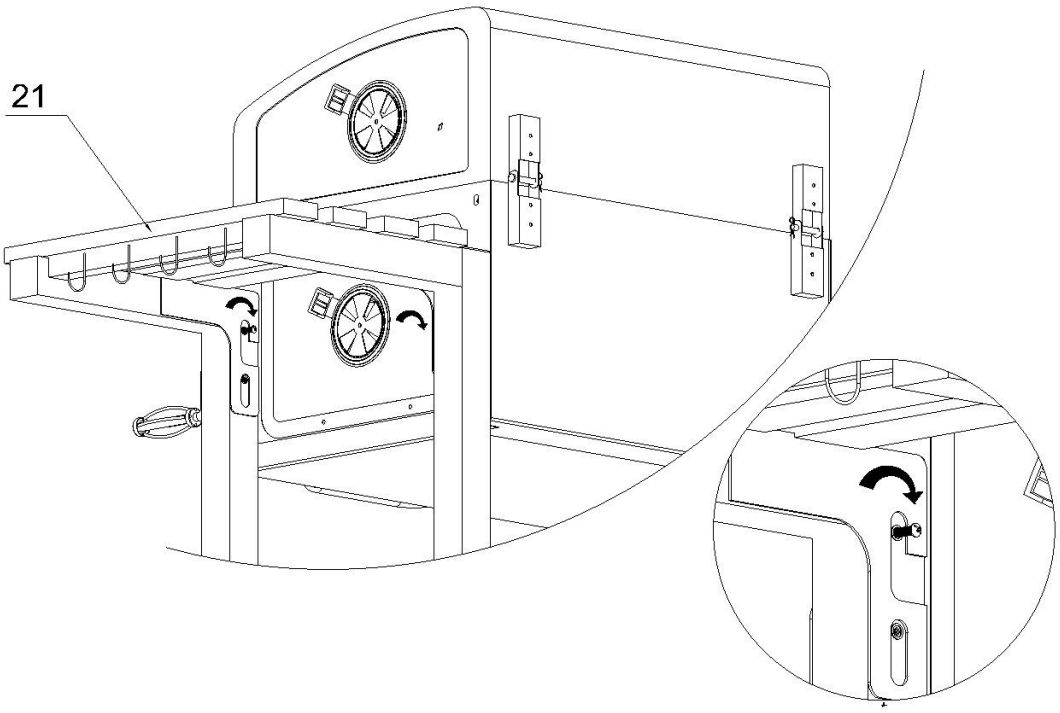

step 19

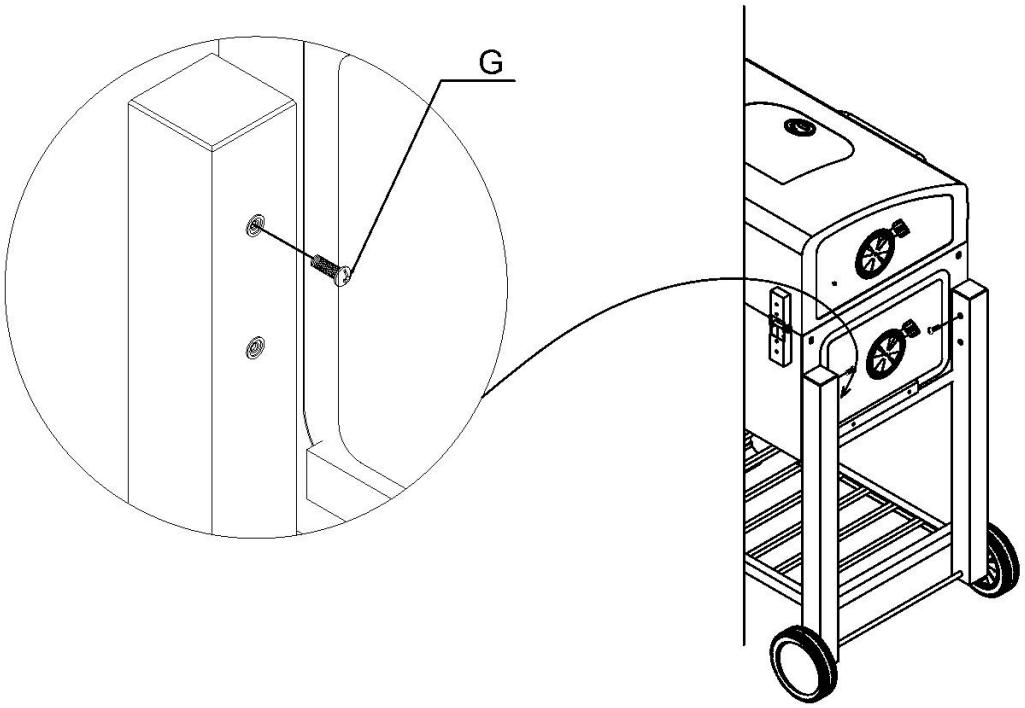

step 20

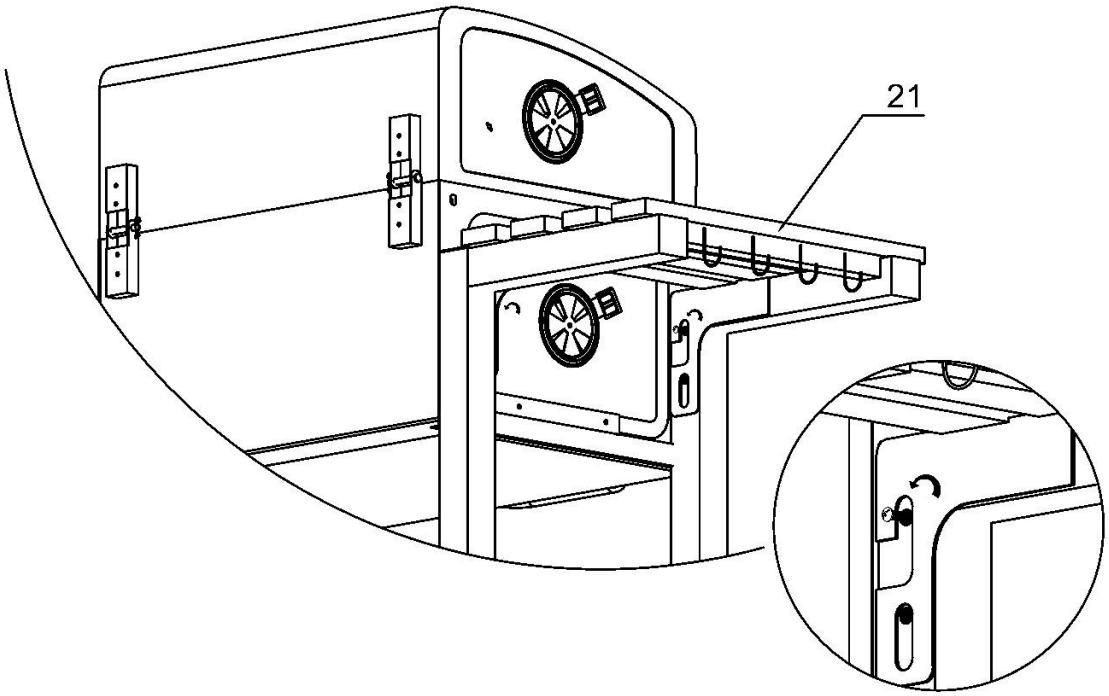

step 21

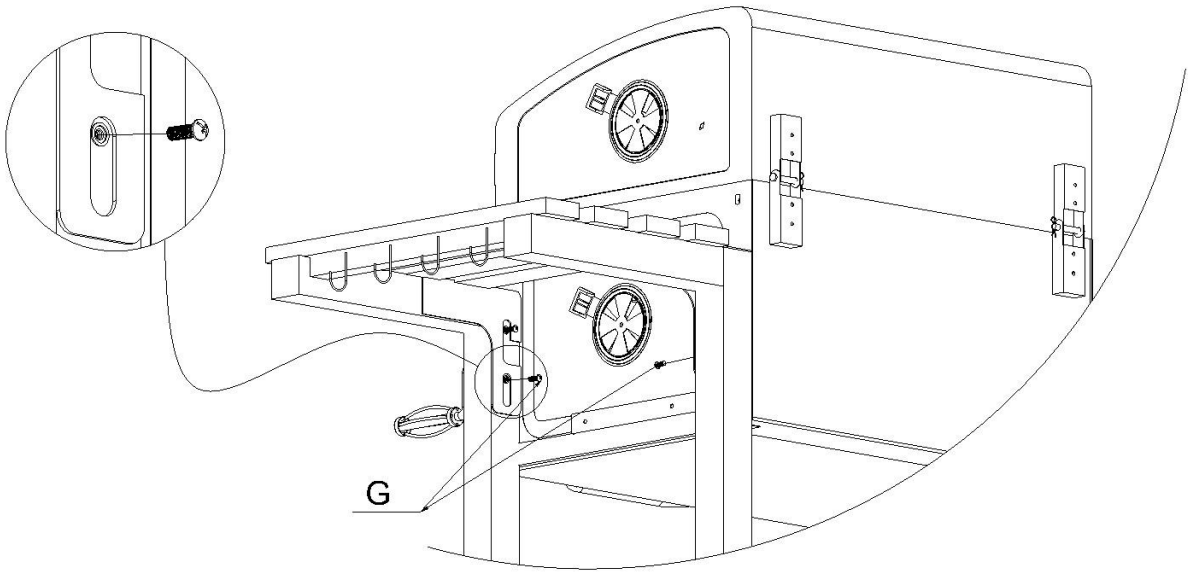

step 22

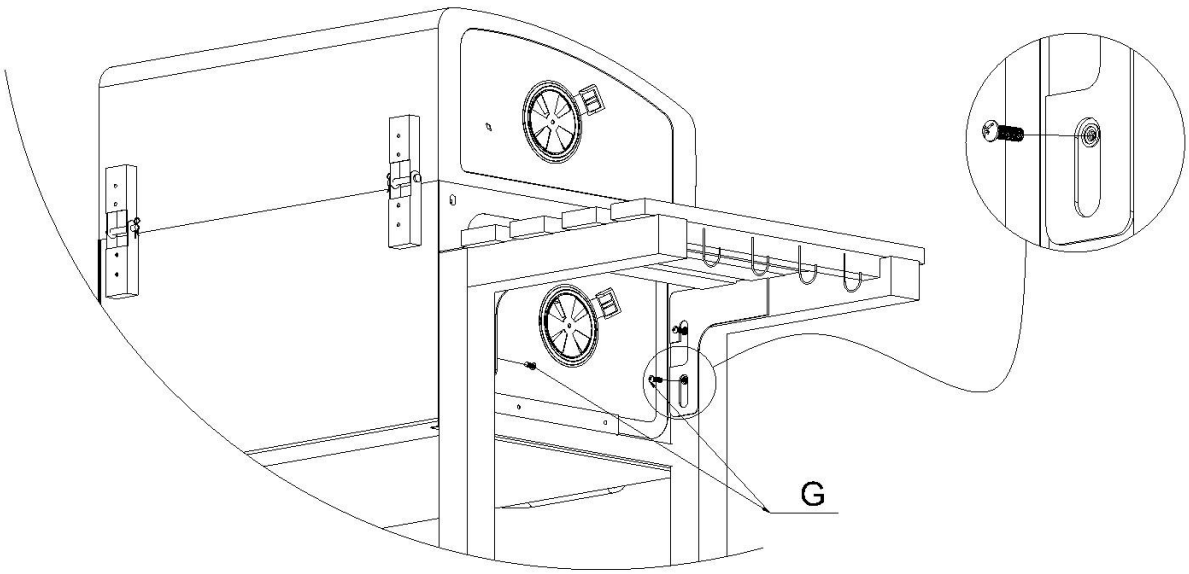

step 23

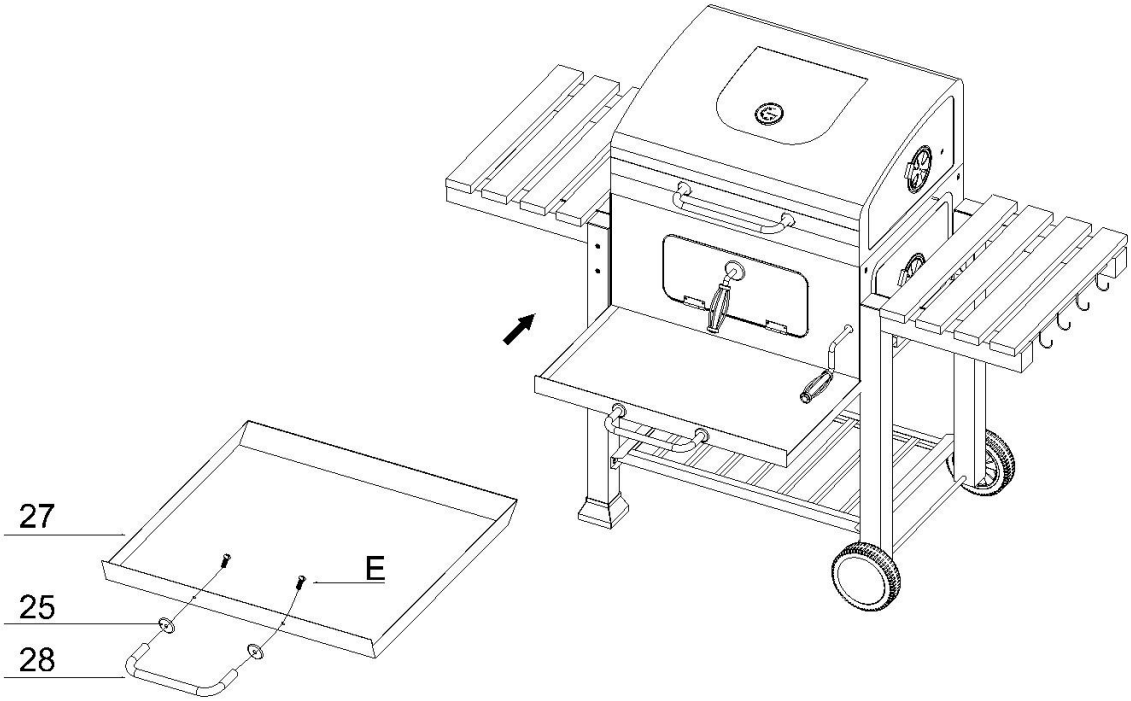

step 24

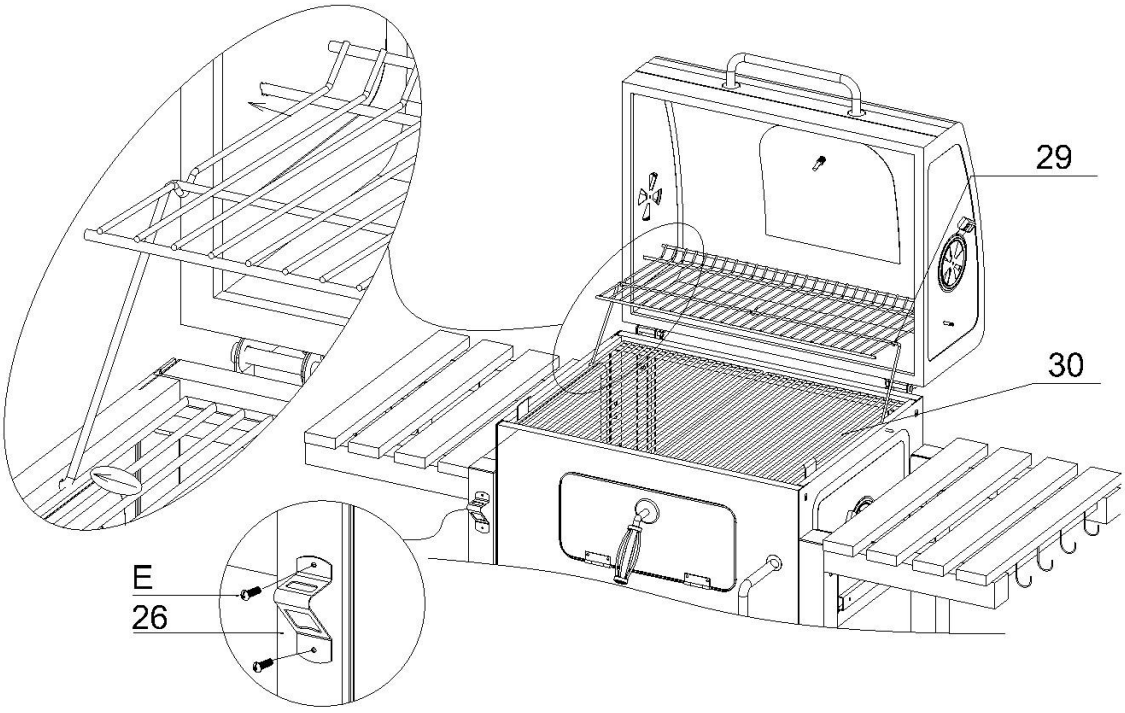

HOWARM

You've reached the end of the guide. With proper use and regular care, the product will continue to deliver reliable performance and comfort for years to come. If you ever need assistance, our support team is always ready.