https://howarm.co.uk/

- The barbecue shall be heated up and the fuel kept red hot for at least 30 min prior to the first cooking.
- Do not cook before the fuel has a coating of ash.
- WARNING! This barbecue will become very hot, do not move it during operation.
- Do not use indoors!
- WARNING! Do not use spirit or petrol for lighting or re-lighting!
- WARNING! Keep children and pets away.

HOWARM

BBQ GRILL

/ MODEL: SK630

USER MANUAL

NO.	Image	Unit
1		1PCS
2		1PCS
3		1PCS
4		1PCS
5	LF	1PCS
6	LB	1PCS
7		2PCS
8	RF	1PCS
9	RB	1PCS

NO.	Image	Unit
10		1PCS
11		1PCS
12		2PCS
13		2PCS
14		1PCS
15		1PCS
16		1PCS
17		1PCS
18		1PCS

NO.	Image	Unit
19		4PCS
20		2PCS
21		1PCS
22		1PCS
23		2PCS
24		1PCS
25		4PCS
26		2PCS
27		1PCS

NO.	Image	Unit
28		1PCS
29		1PCS
30		3PCS

Hardware list			
A	M6x12 Screw		21pcs
B	M6x35 Screw		4 pcs
C	M6x45 Screw		4 pcs
D	M6x15 Screw		8 pcs
E	M5x16 Screw		4pcs
F	M5x28 Screw		2pcs
G	M6 Half Screw Thread Bolt		8 pcs
H	M6 Nut		9 pcs
I	M10 Nut		2 pcs
J	Hinge Pin		2 pcs
K	Cotter Pin		3 pcs
L	D6 Washe		13 pcs
M	D6 Spring washer		13 pcs
N	M5x28 Screw		1 pcs

step1

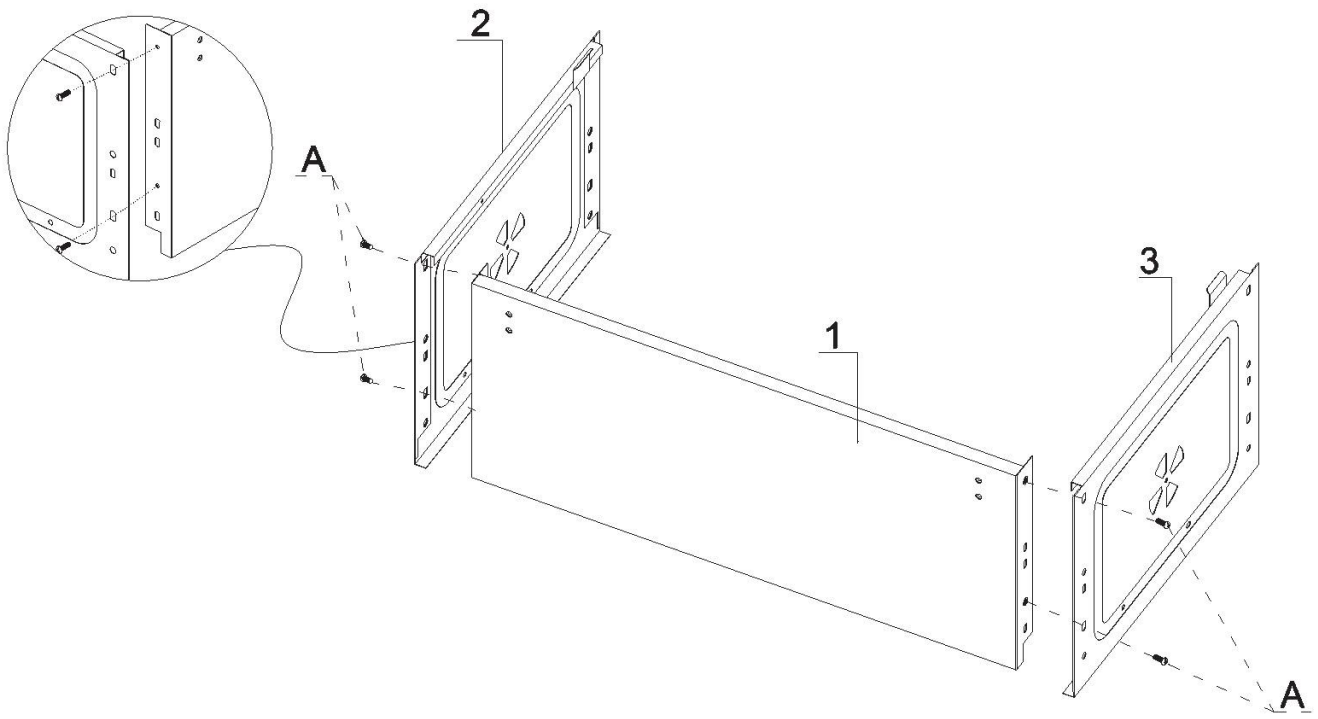

step2

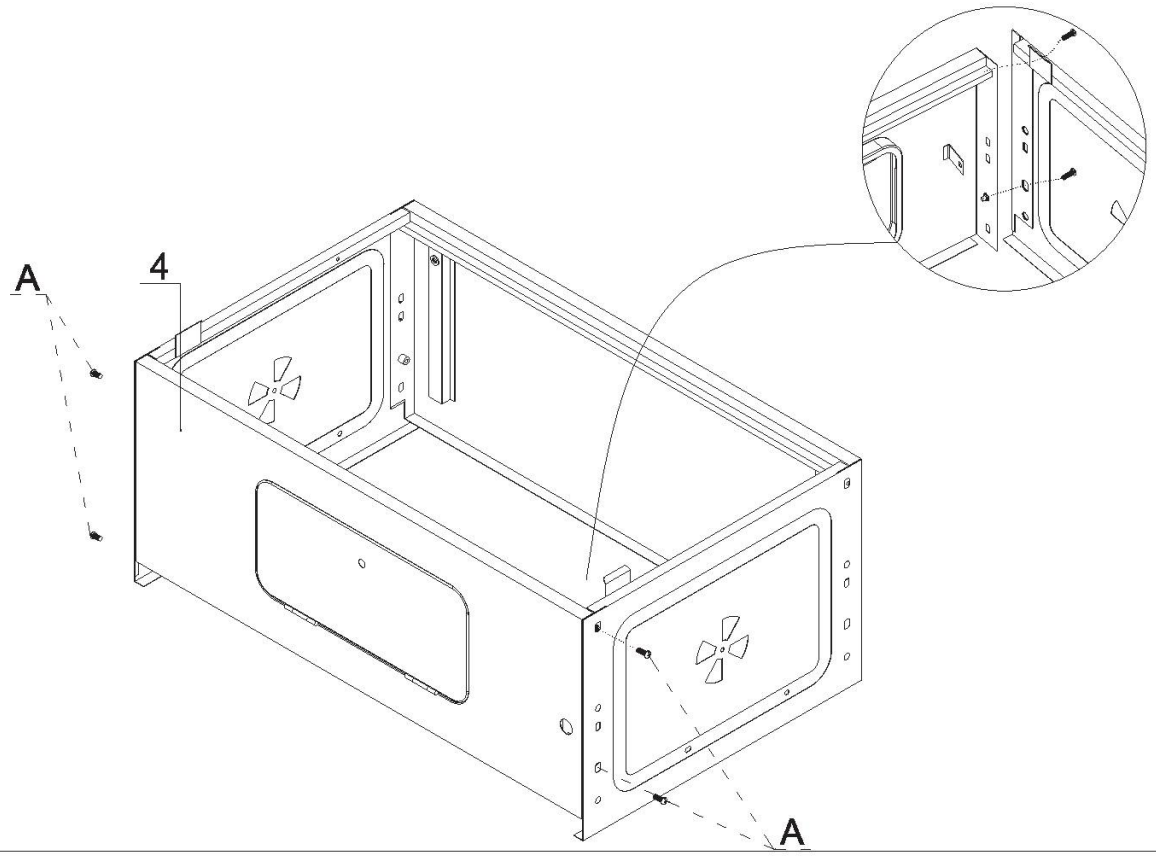

step3

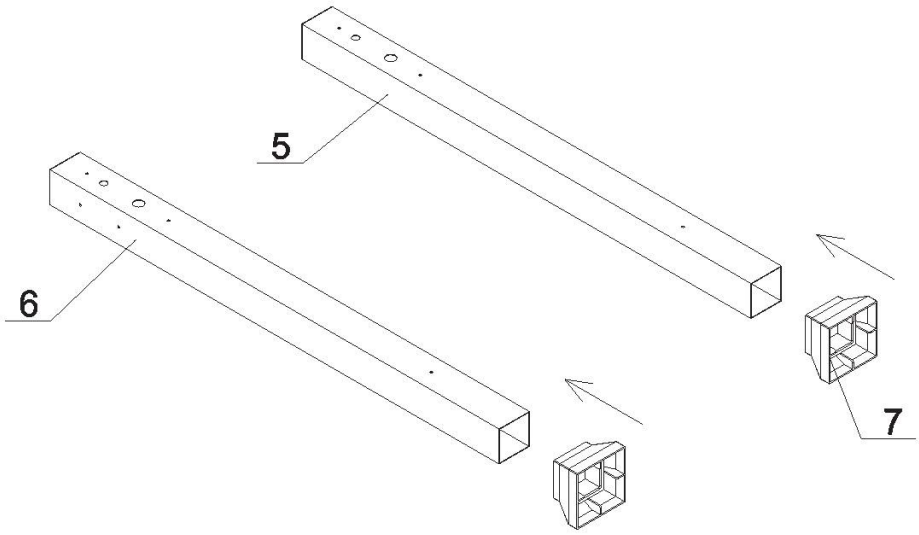

step4

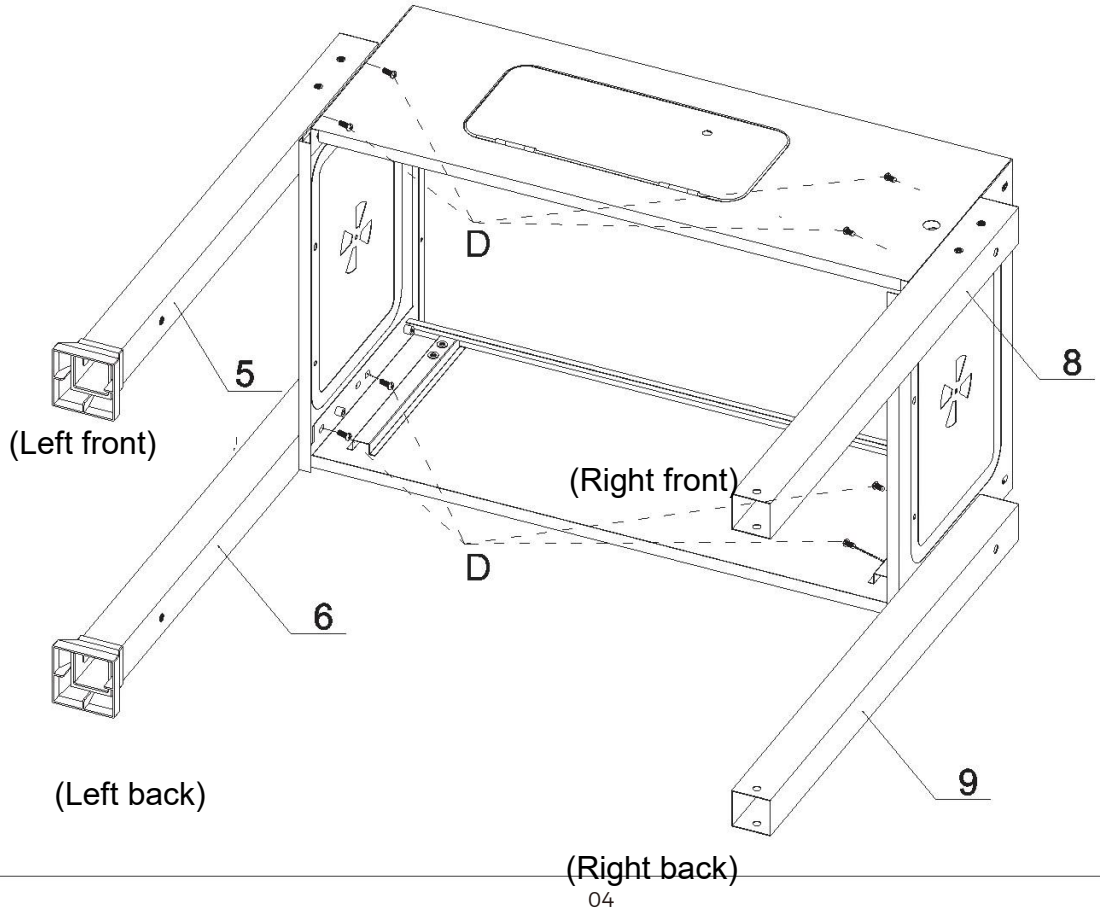

step5

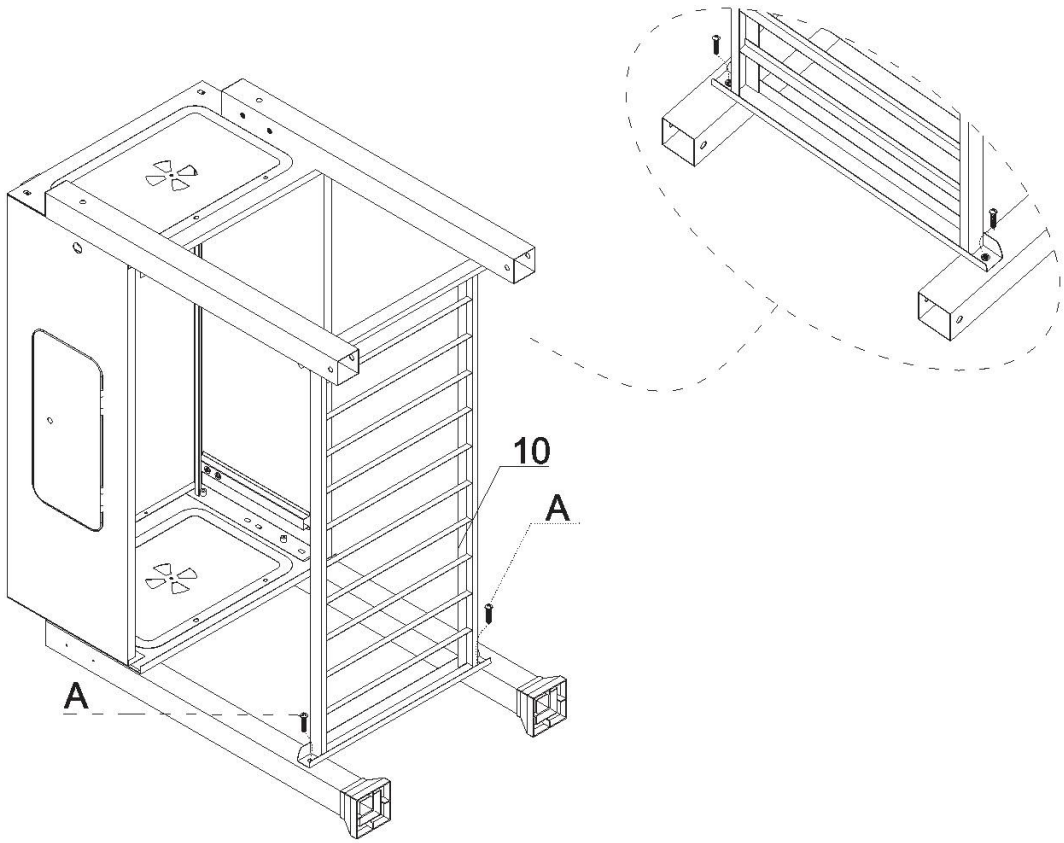

step6

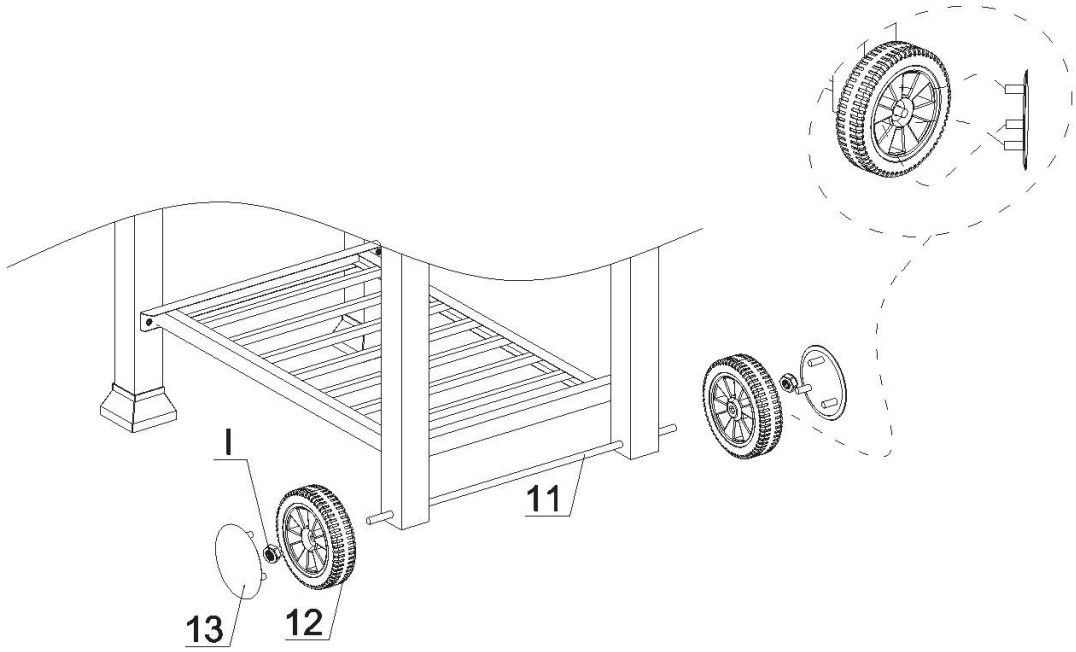

step7

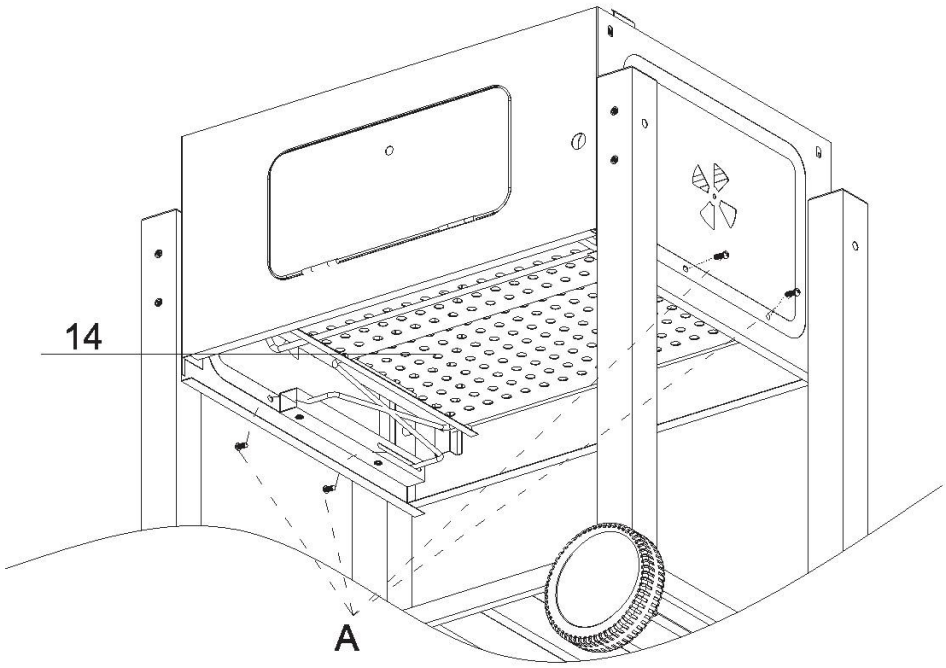

step8

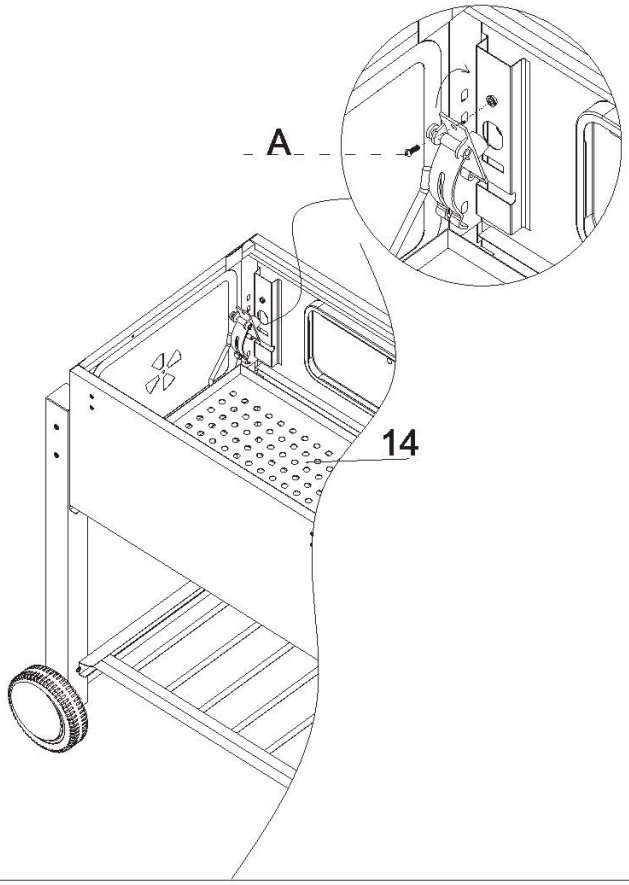

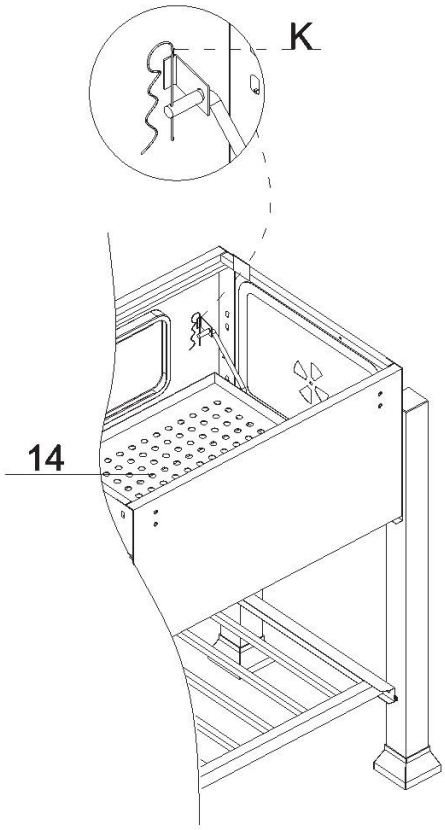

step9

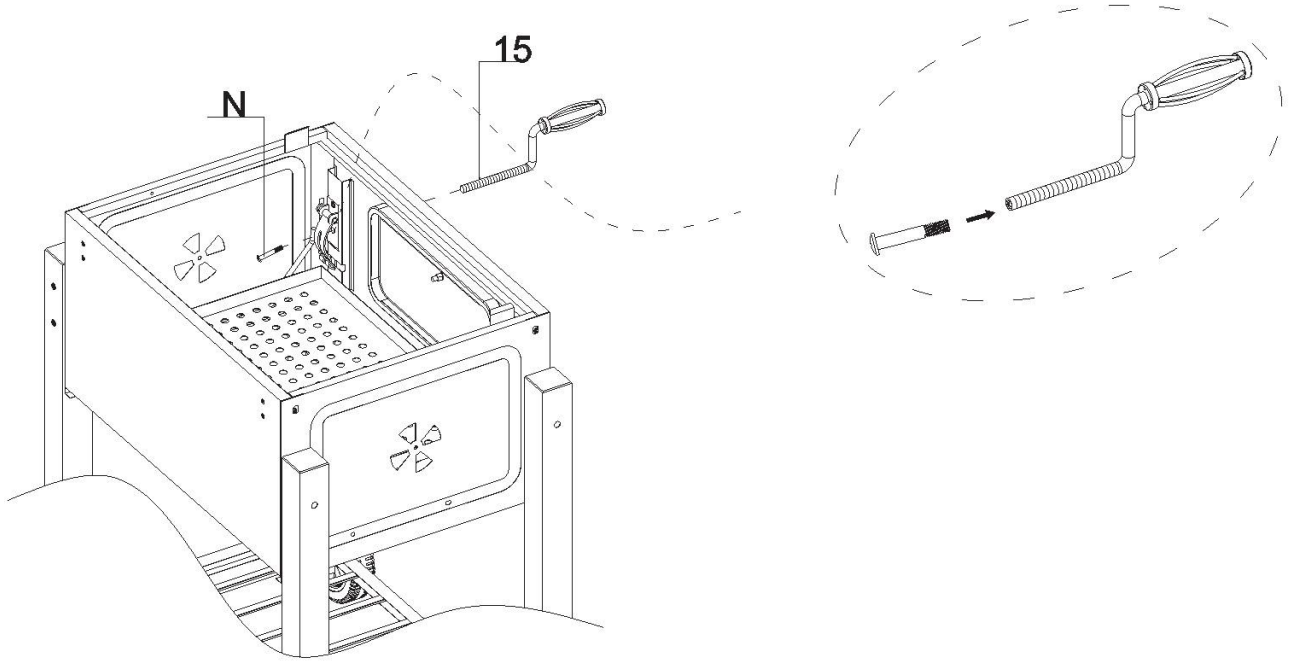

step10

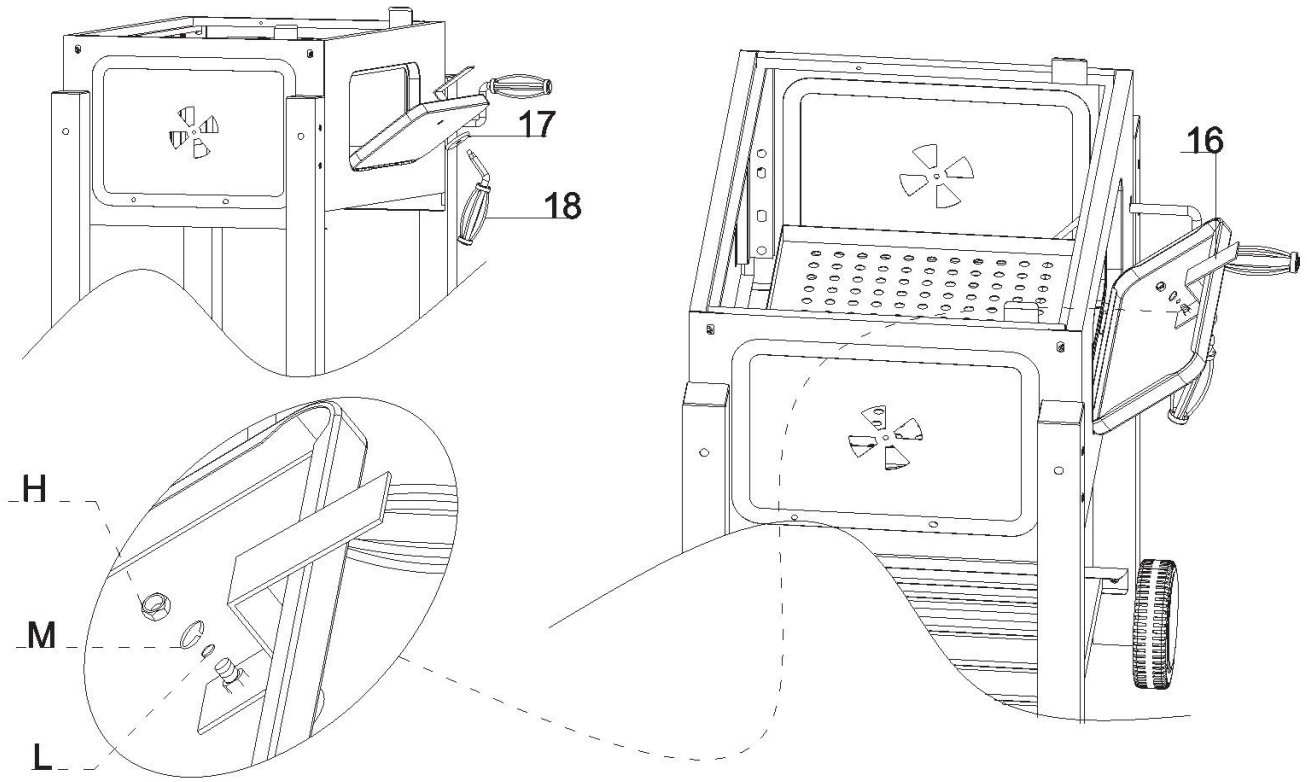

step11

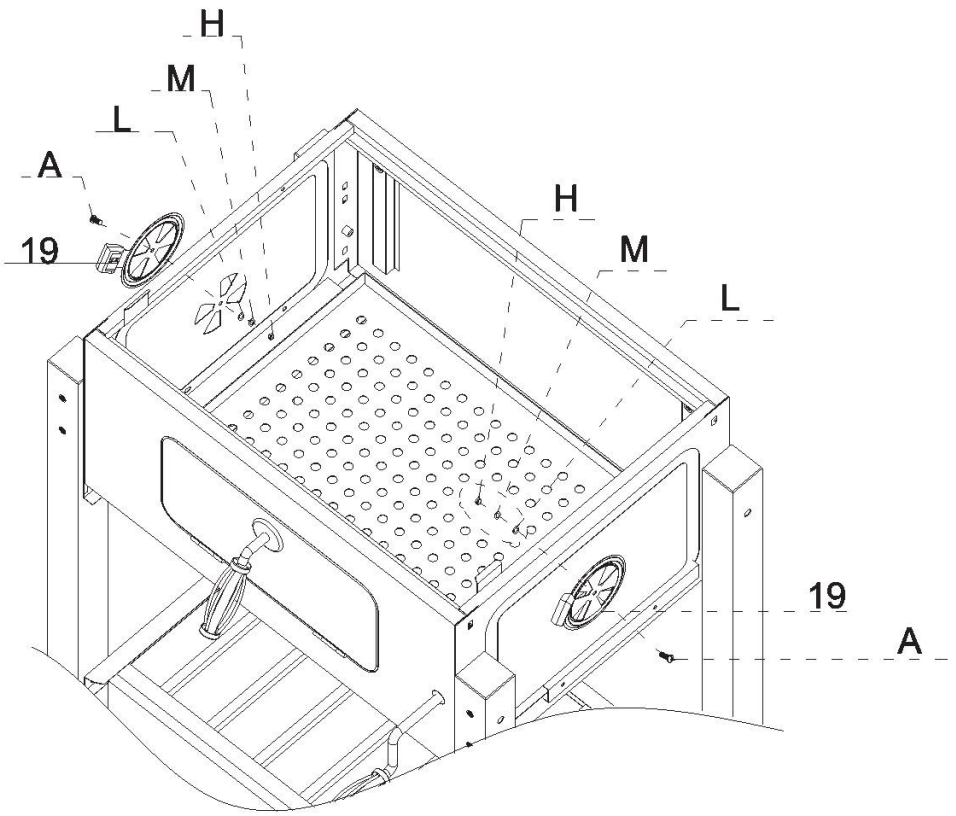

step12

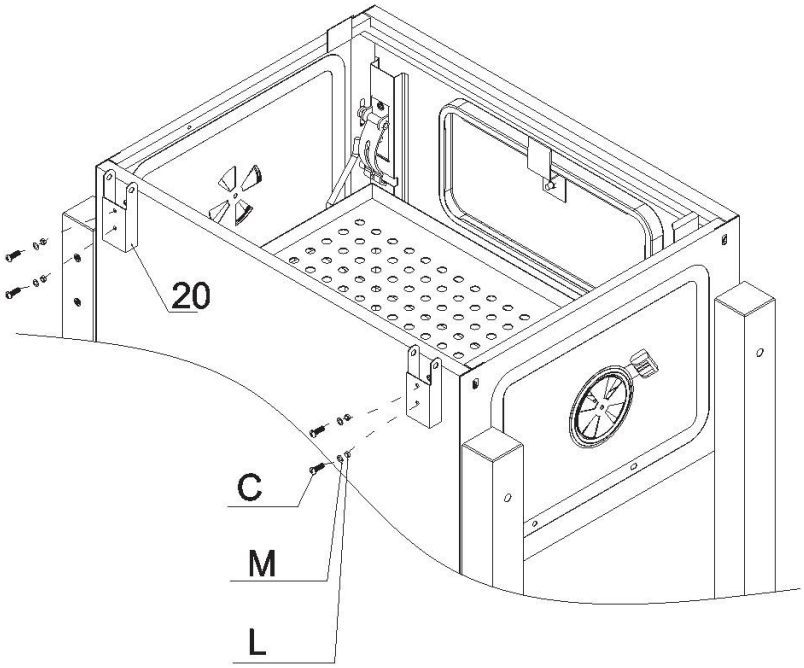

step13

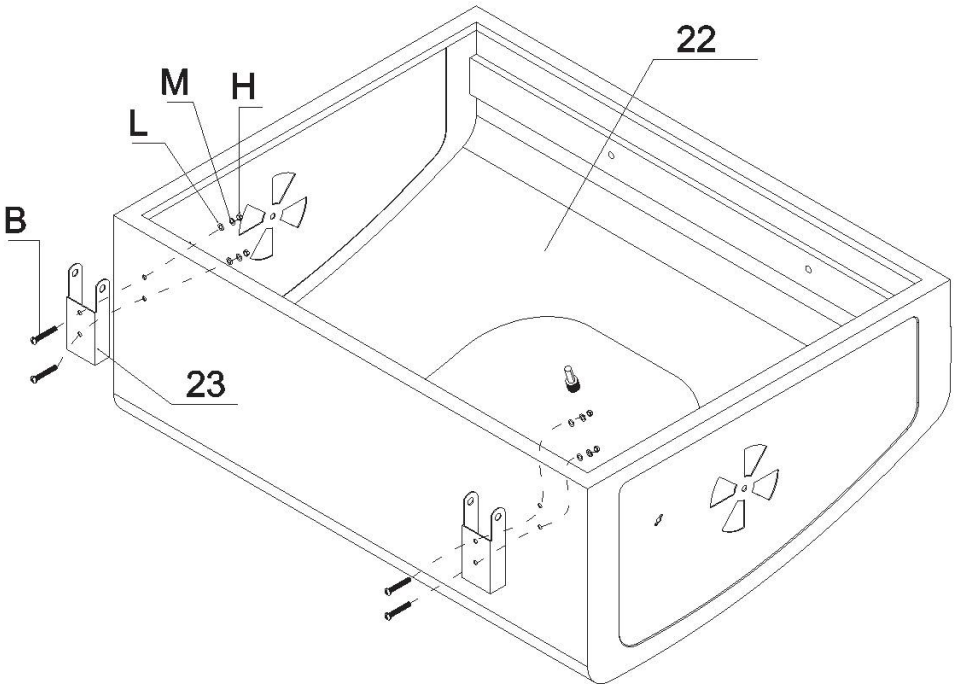

step14

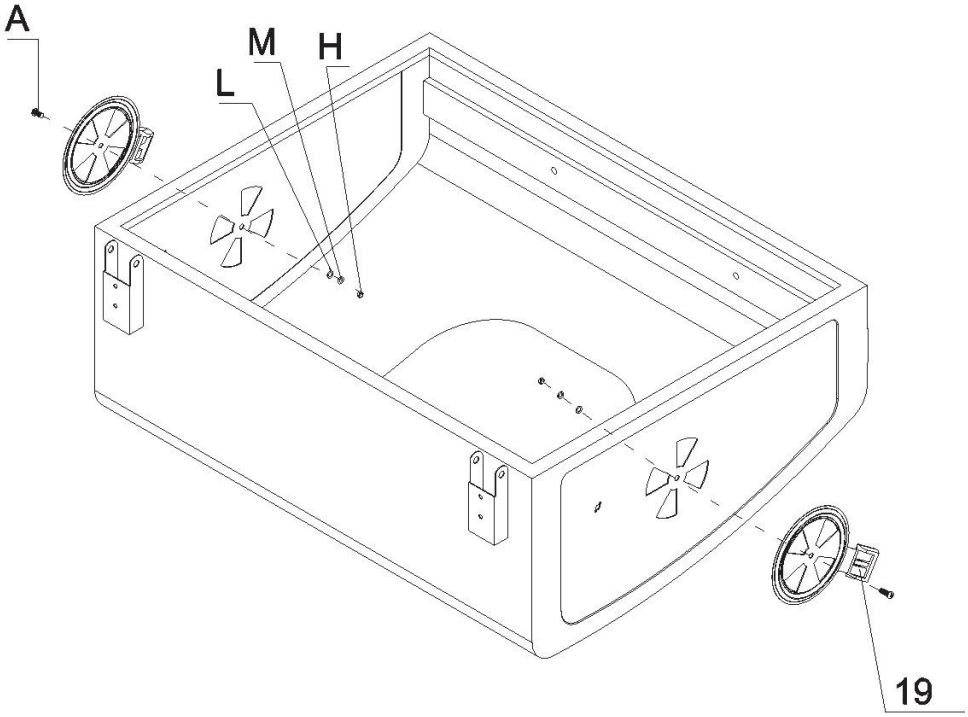

step15

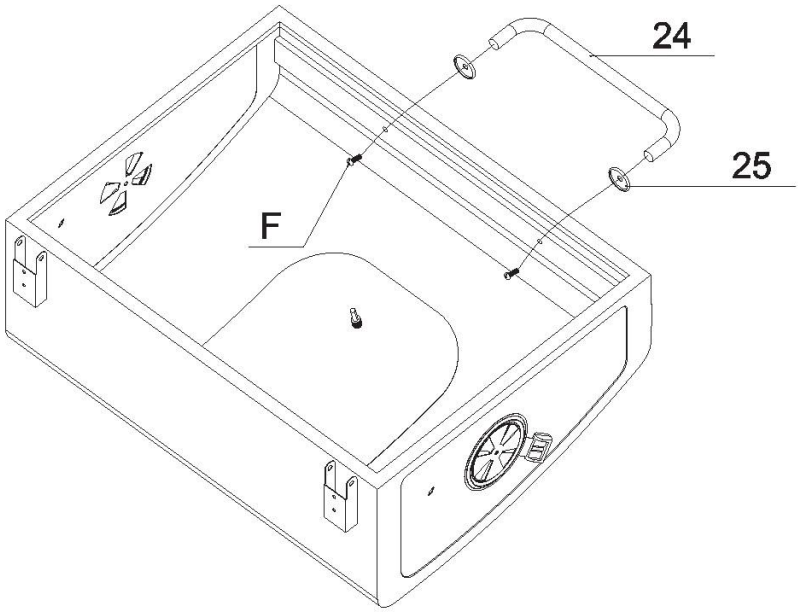

step16

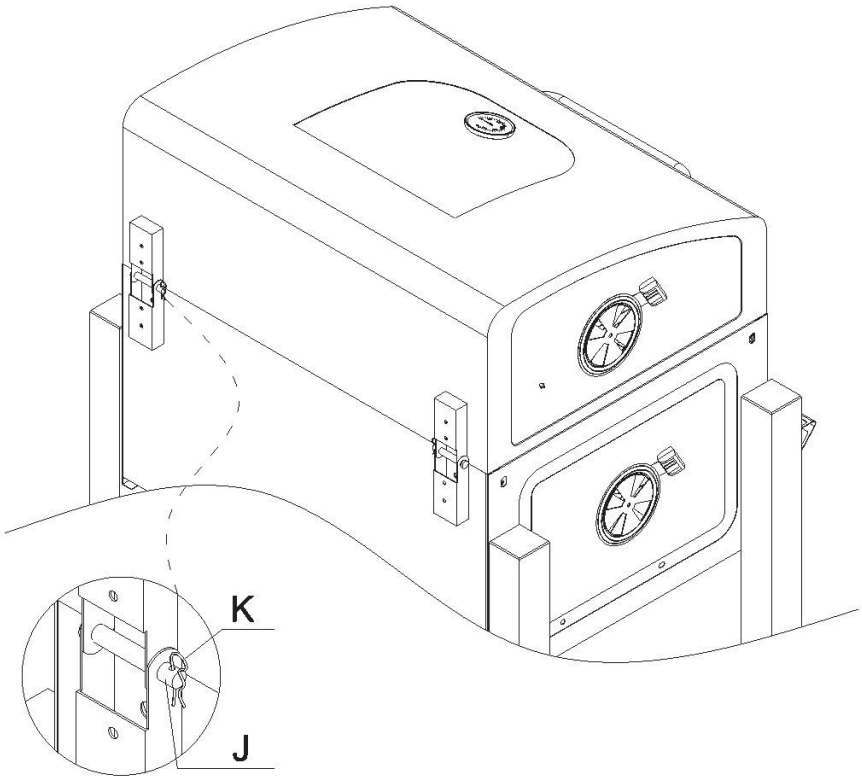

step17

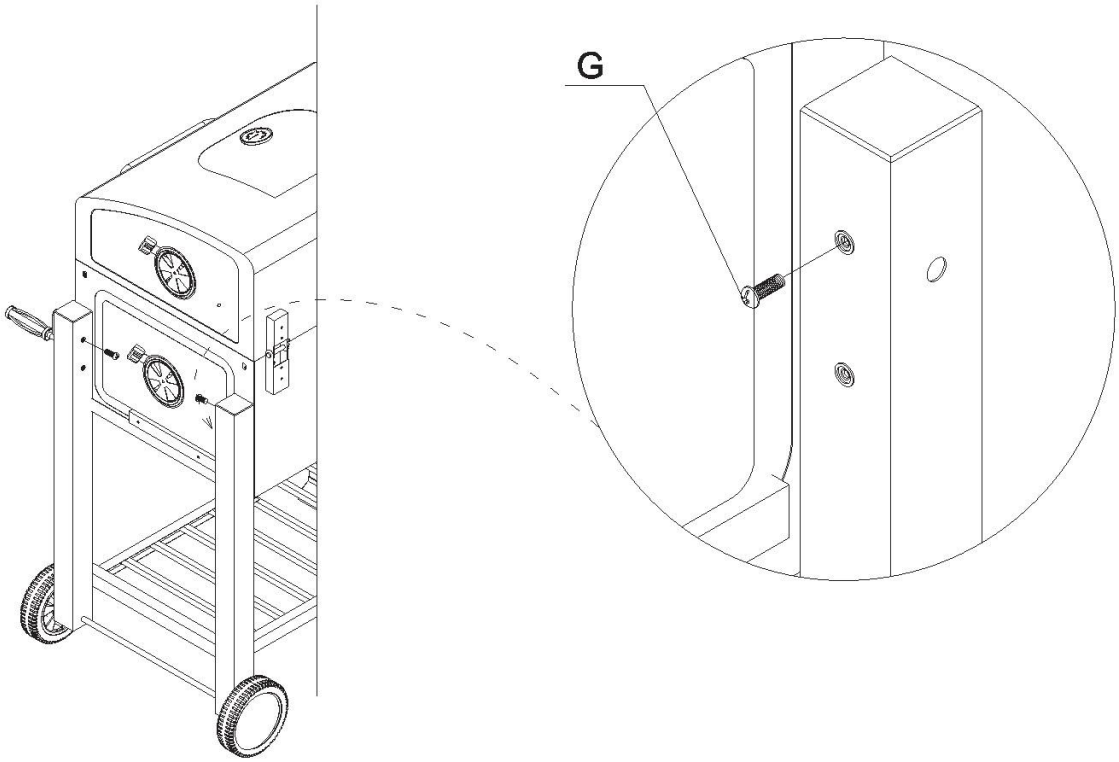

step18

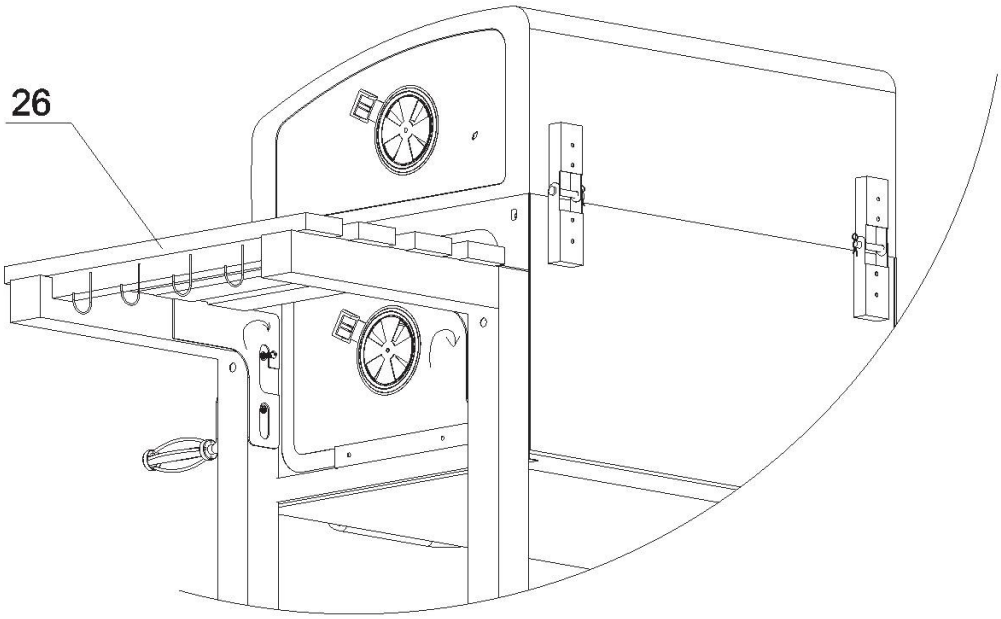

step19

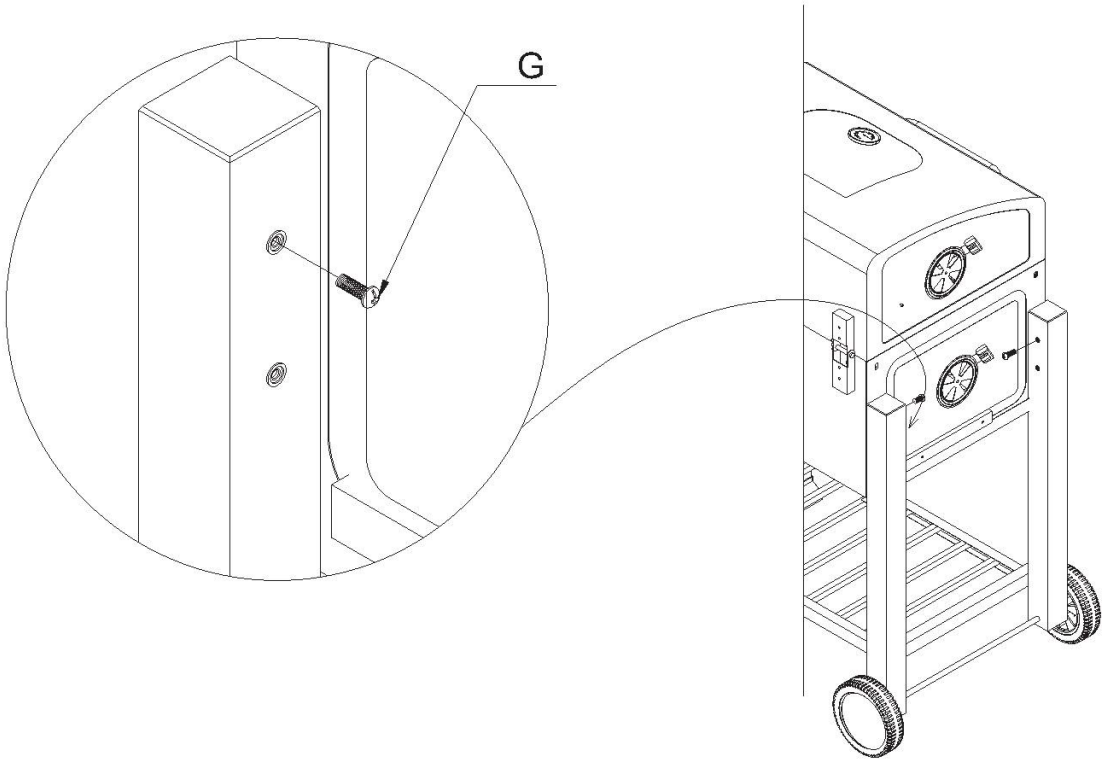

step20

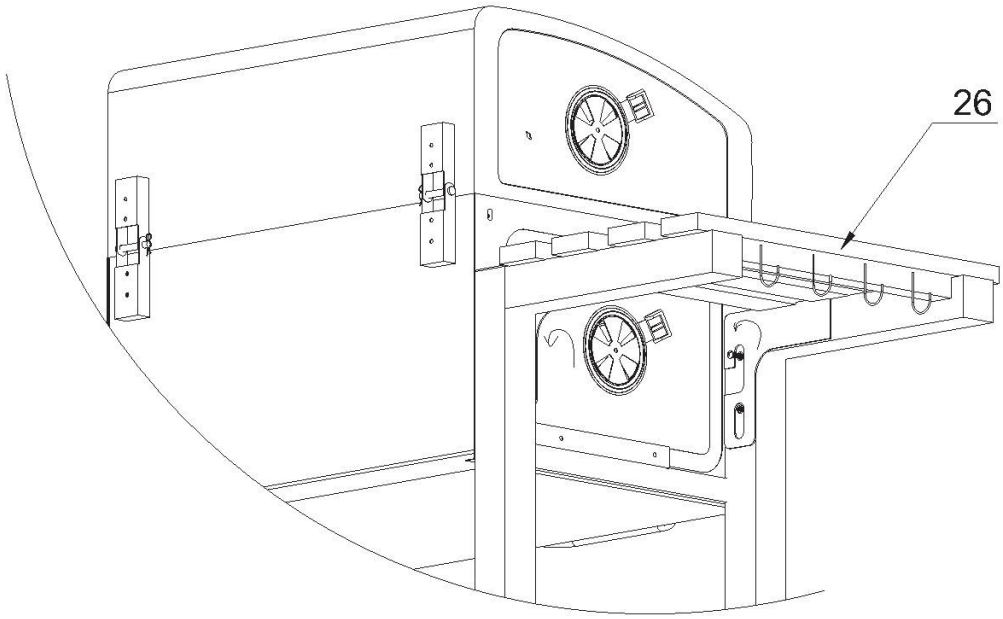

step21

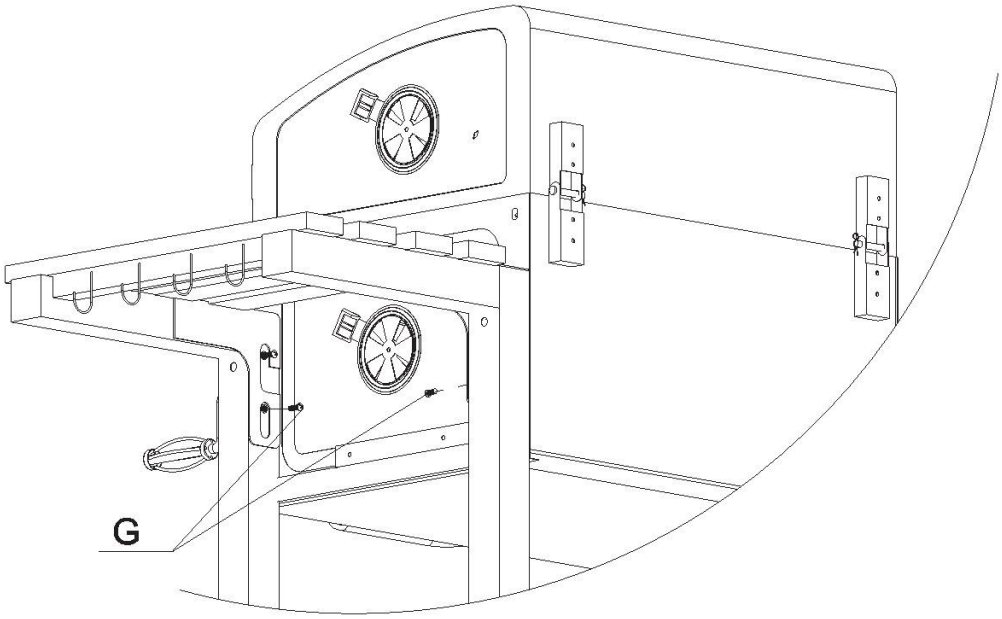

step22

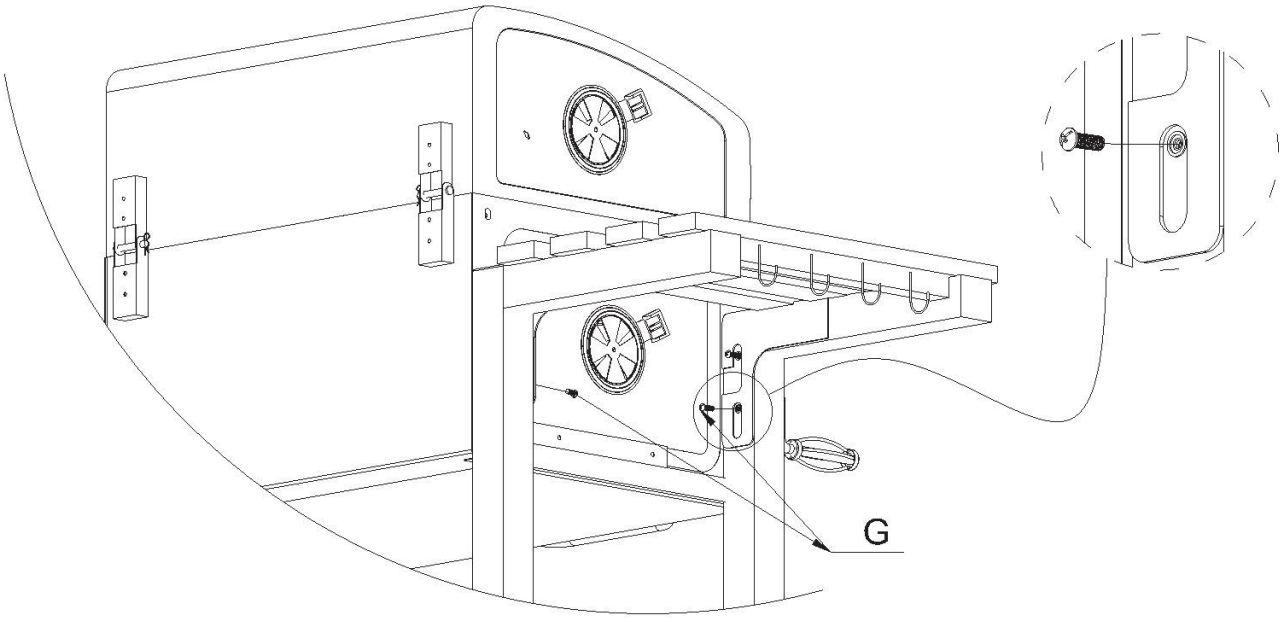

step23

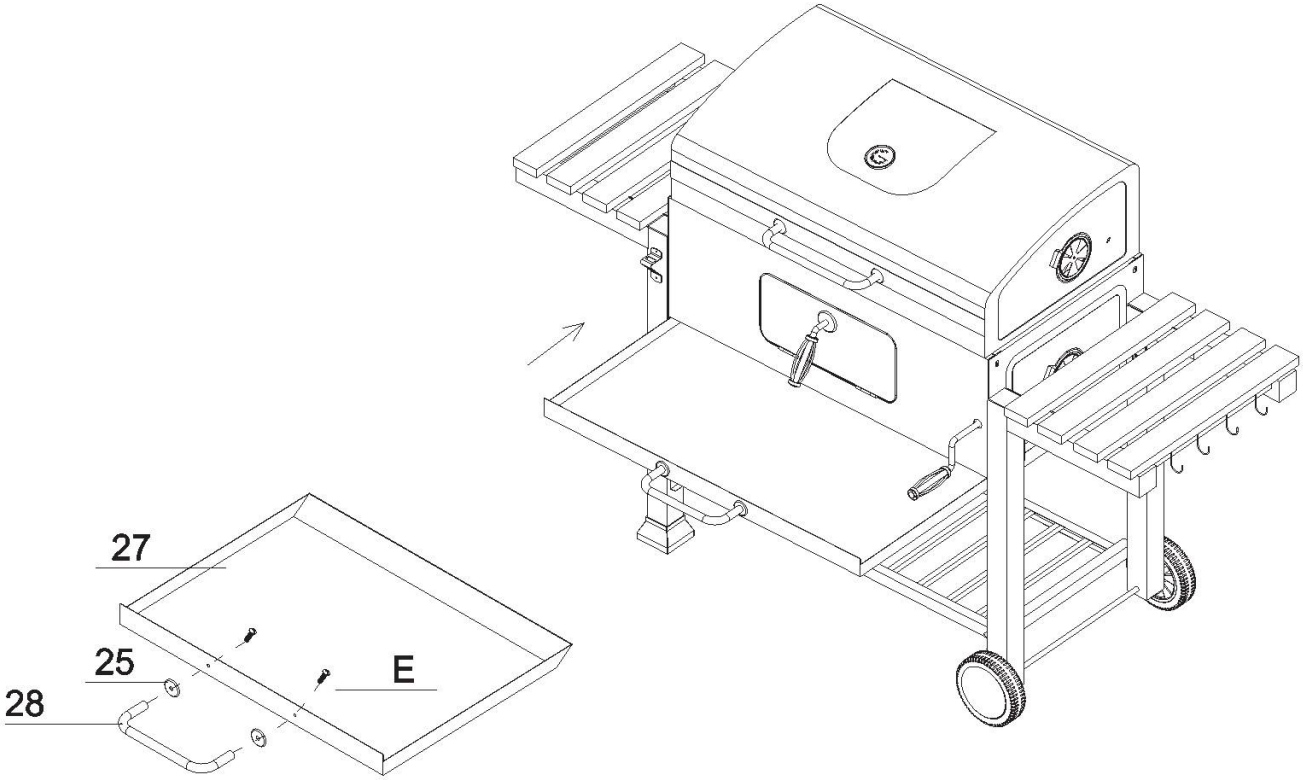

step24

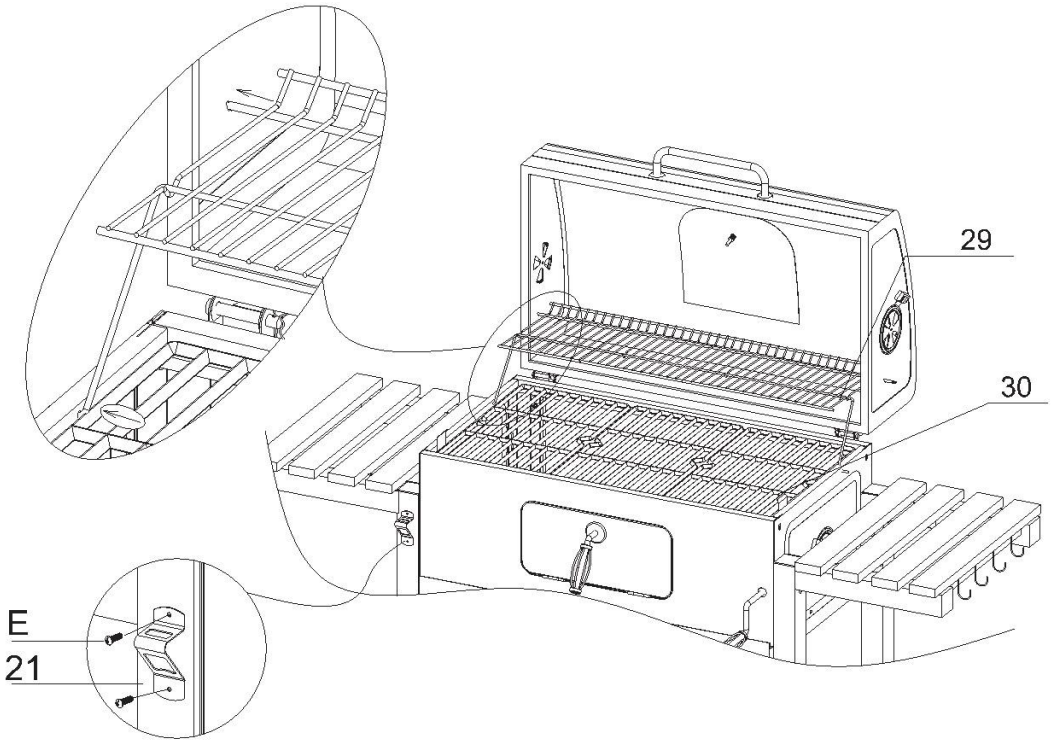

HOWARM

You've reached the end of the guide. With proper use and regular care, the product will continue to deliver reliable performance and comfort for years to come. If you ever need assistance, our support team is always ready.